UMC Utrecht

In room Magnetic Resonance Imaging guided Radiotherapy (MRIgRT)

Jan Lagendijk and Bas Raaymakers

UMC Utrecht:

- Chris Bakker
- Boxue Liu
- Alexander Raaijmakers
- Rajko Topolnjak
- Richard van de Put
- Uulke van der Heide
- Cecile Jeukens
- Ina Jürgenliemk-Schulz
- Marco van Vulpen

Philips Research Hamburg:

- Johan Overweg

Elekta Oncology Crawley

- Kevin Brown

Hybrid MRI accelerator system

Requires system integration:

accelerator and MRI system have to operate simultaneously and independently

closed bore high field MRI

gantry ring based 6 MV MLC accelerator

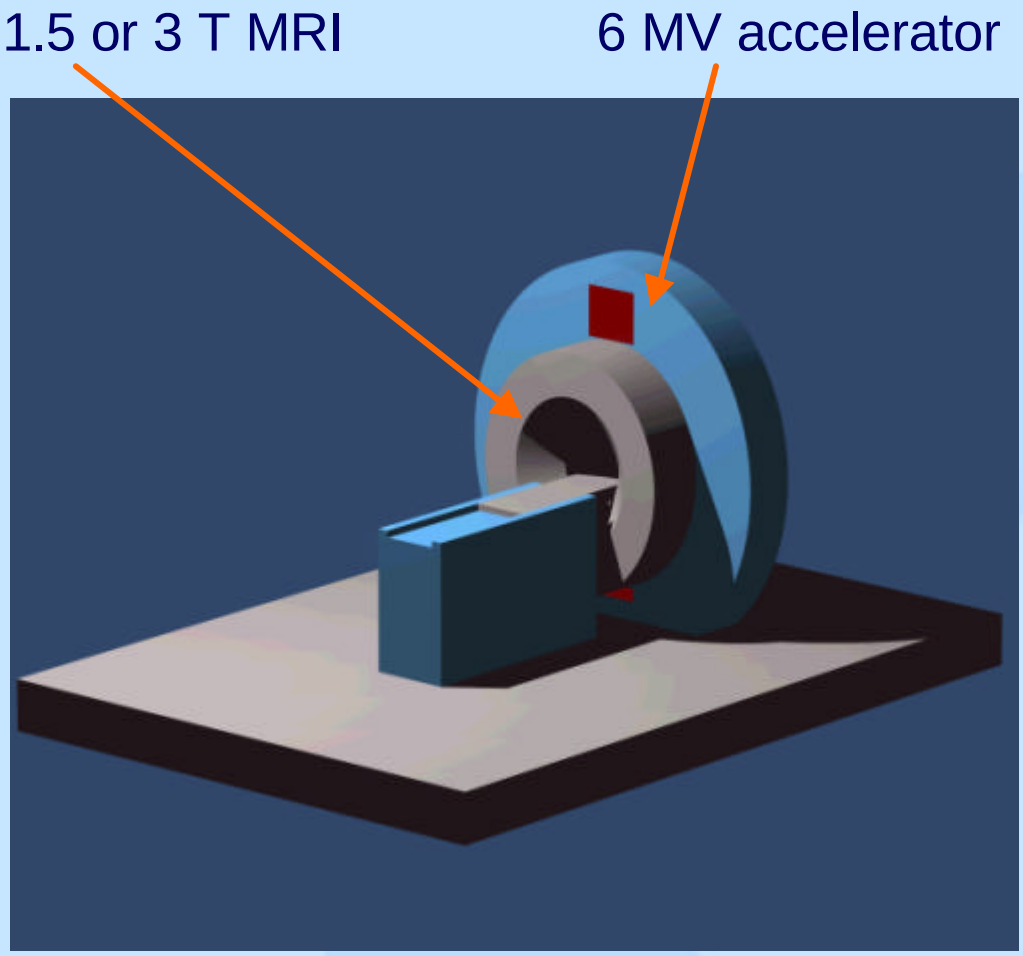

Soft tissue visualization: MRI of cervix carcinoma

T2-weighted

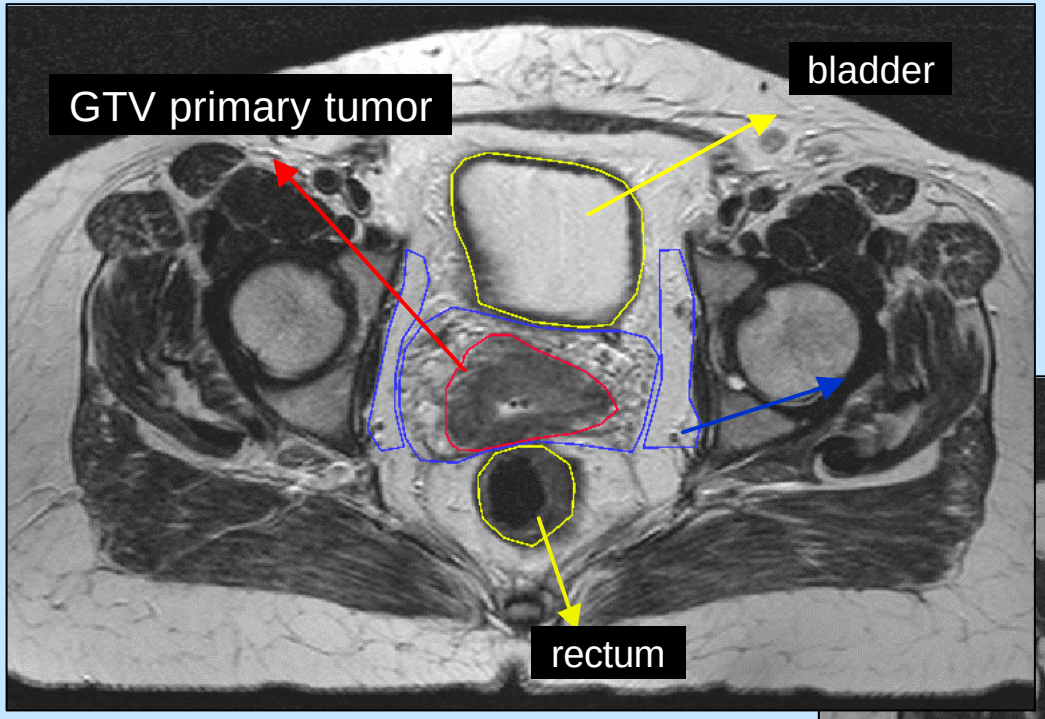

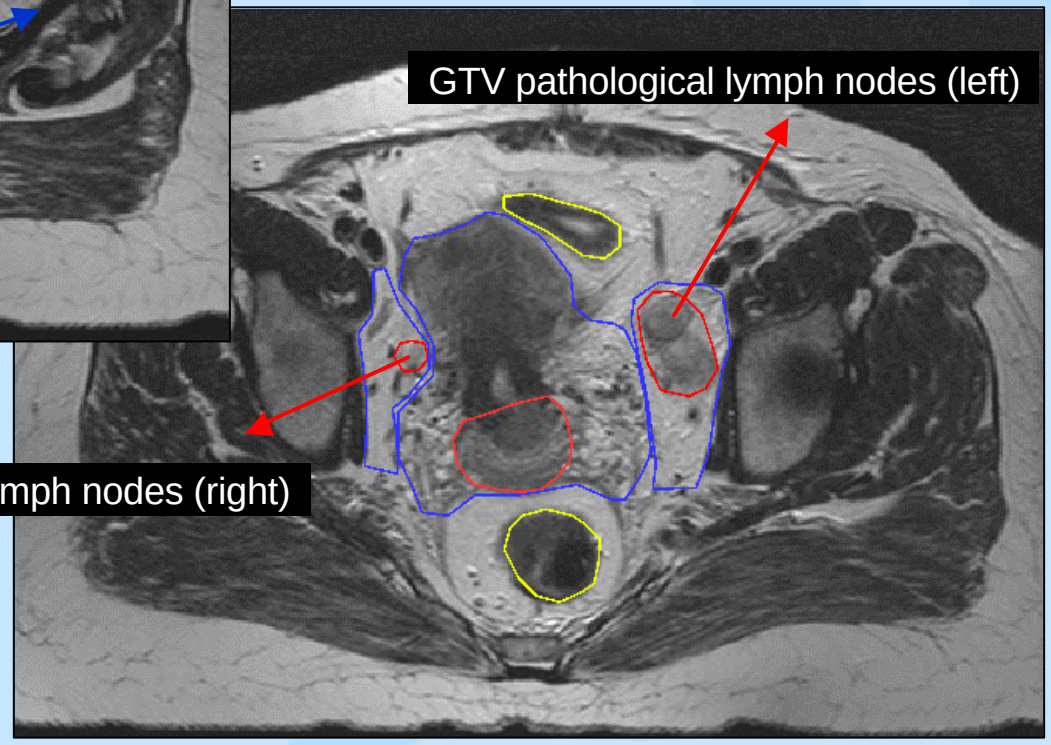

Tumour regression and movement

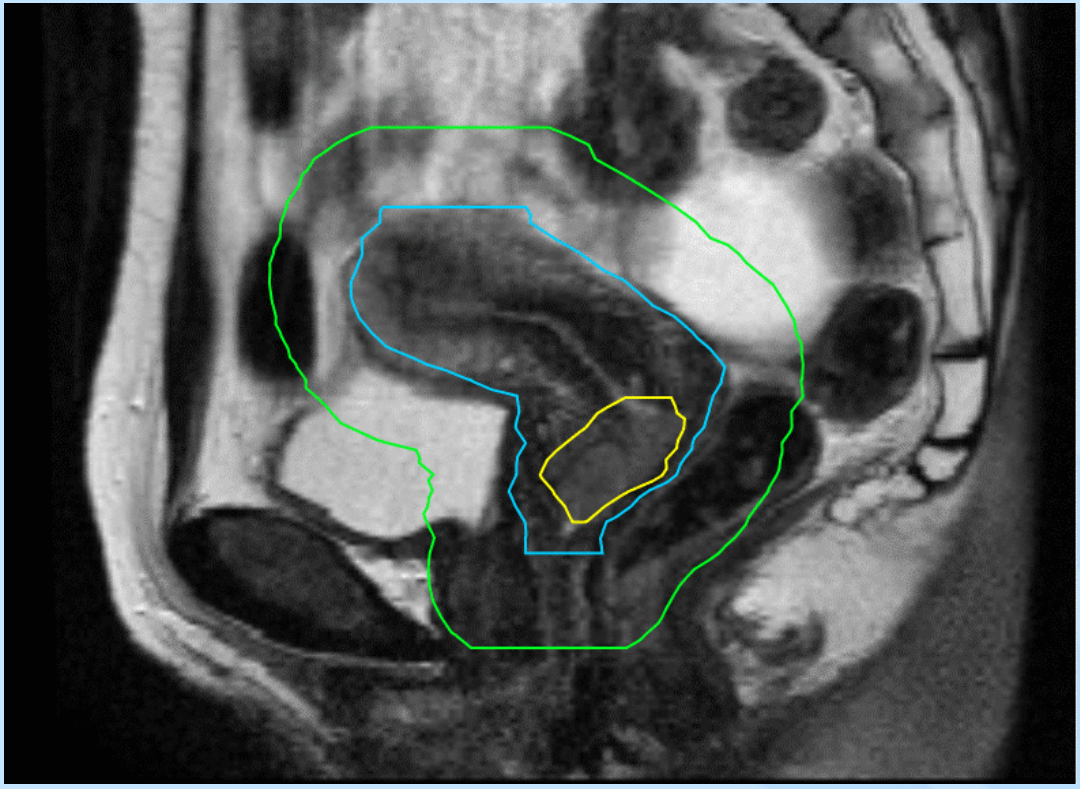

MRI cervix, each week

Prostate movement due to different rectum filling

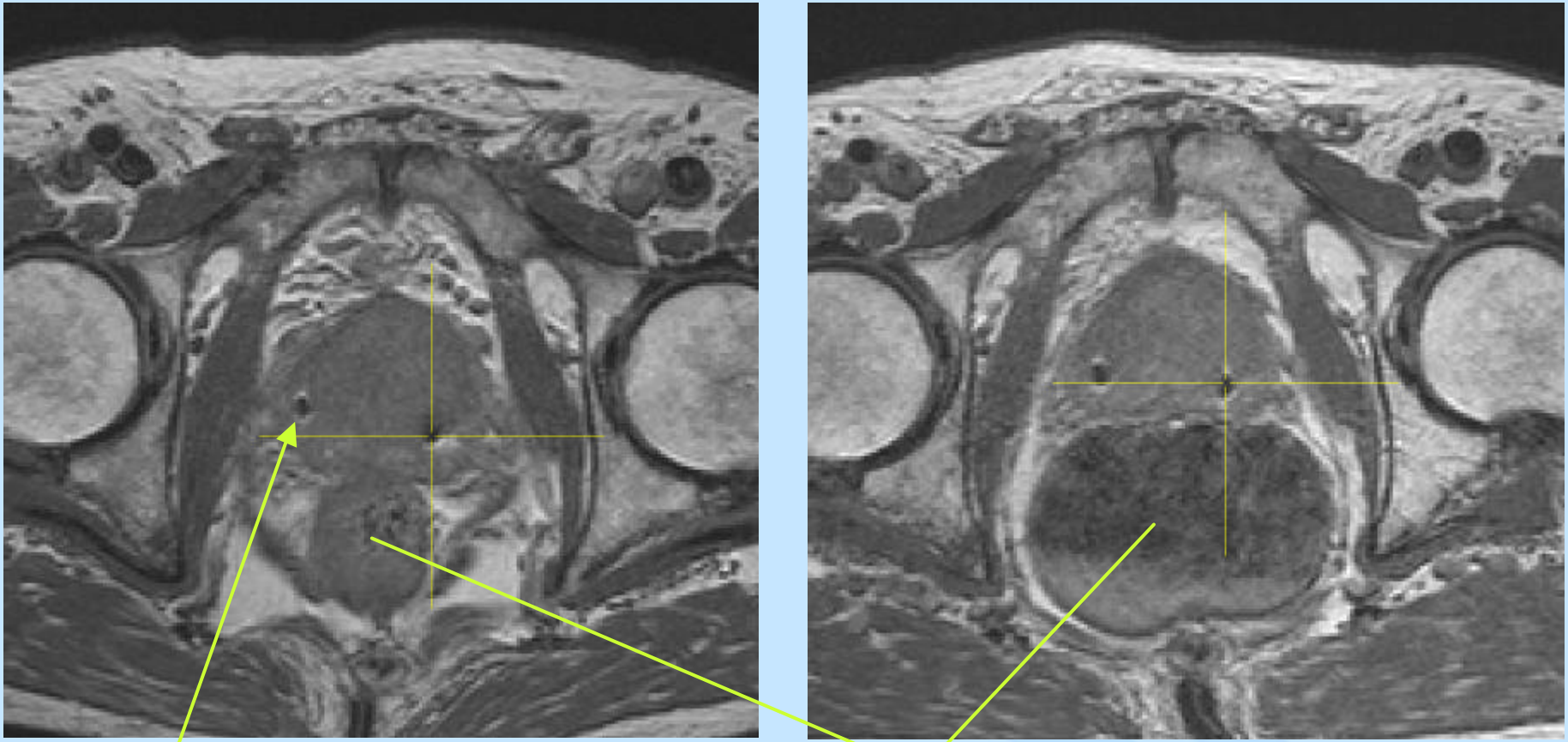

MRI compatible fiducial marker

Different rectum filling

T1 SE

Prostate intrafraction movement

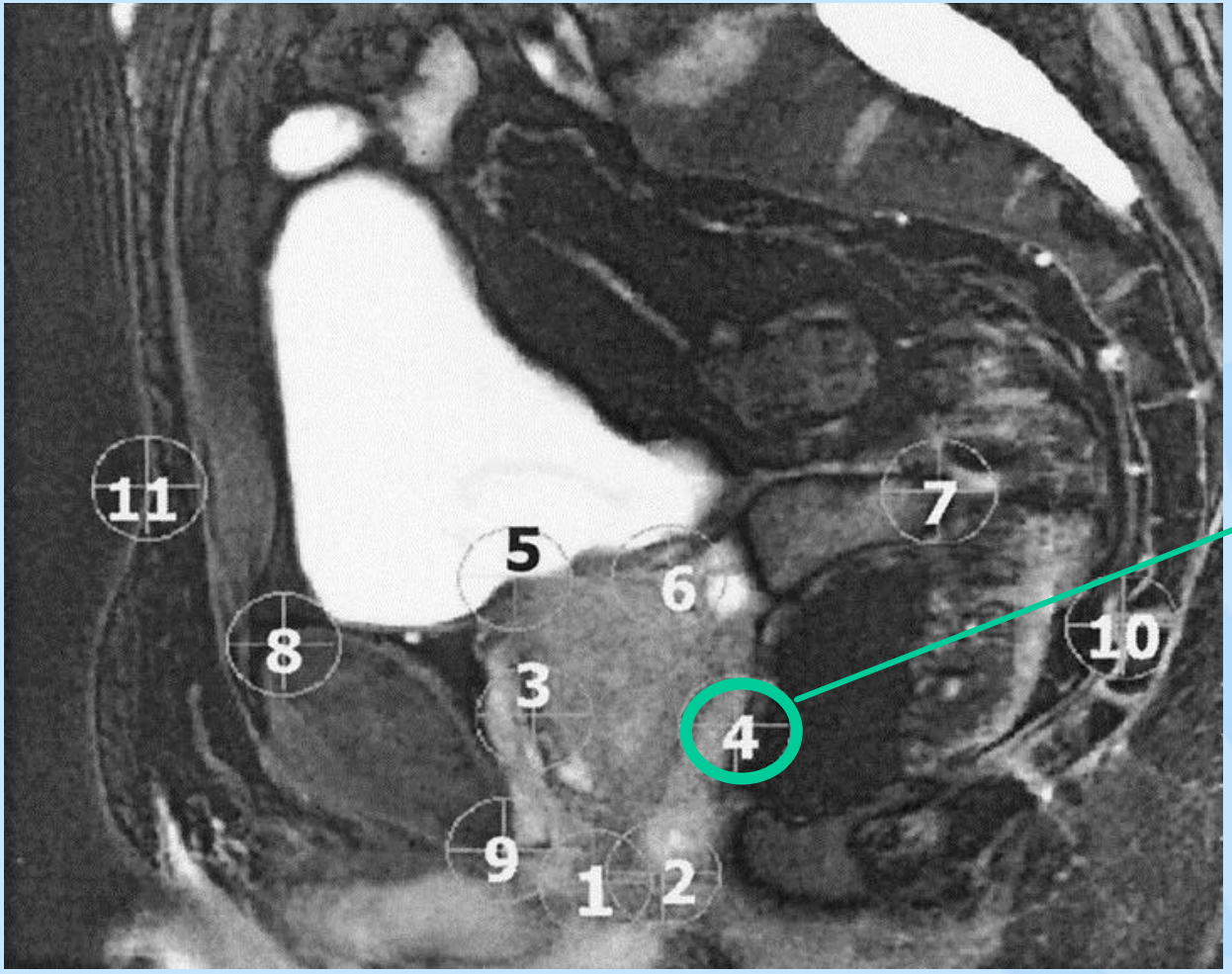

mid-posterior

Ghilezan et al. 2005, Beaumont, PMH, NCI

Prostate intrafraction movement

probability of displacement > 3 mm

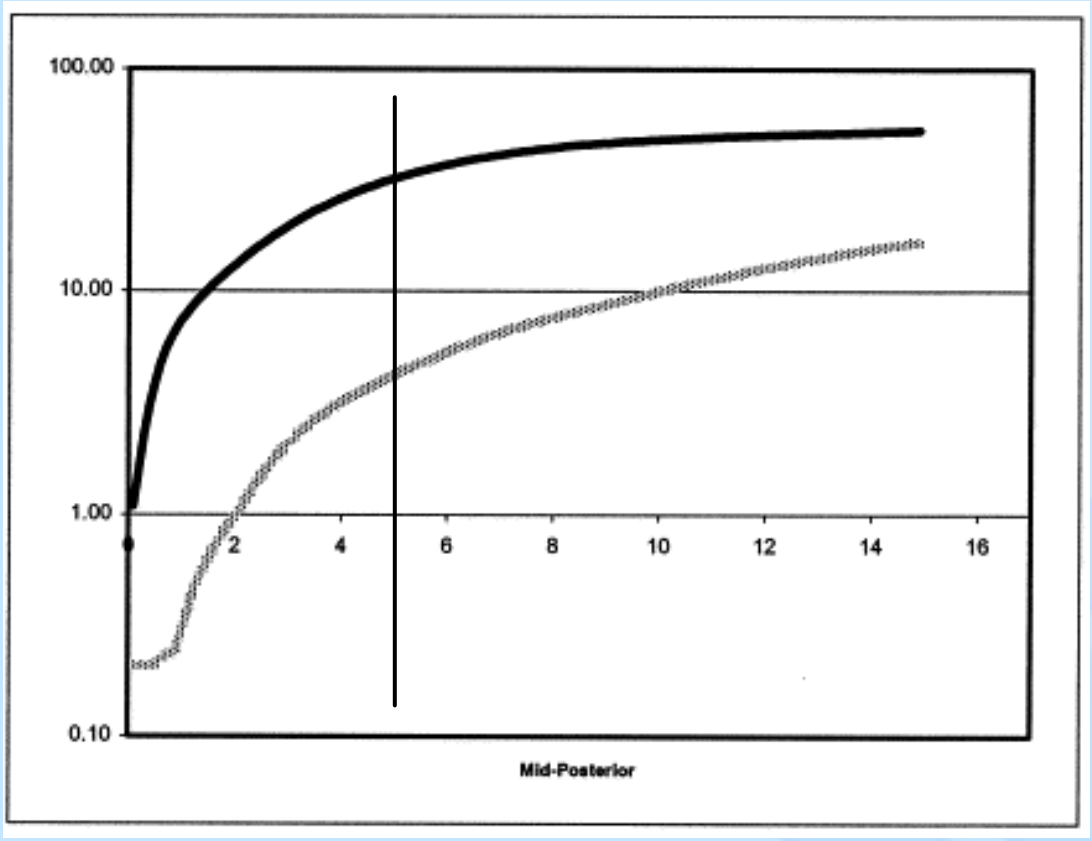

minutes

mid-posterior

solid line:
full rectum

dashed line:
empty rectum

Dynamic MRI lung

- Fast dynamic MRI
- Coronal view
- normal breathing

Dynamic MRI lung

- Fast dynamic MRI
- Sagittal view
- normal breathing

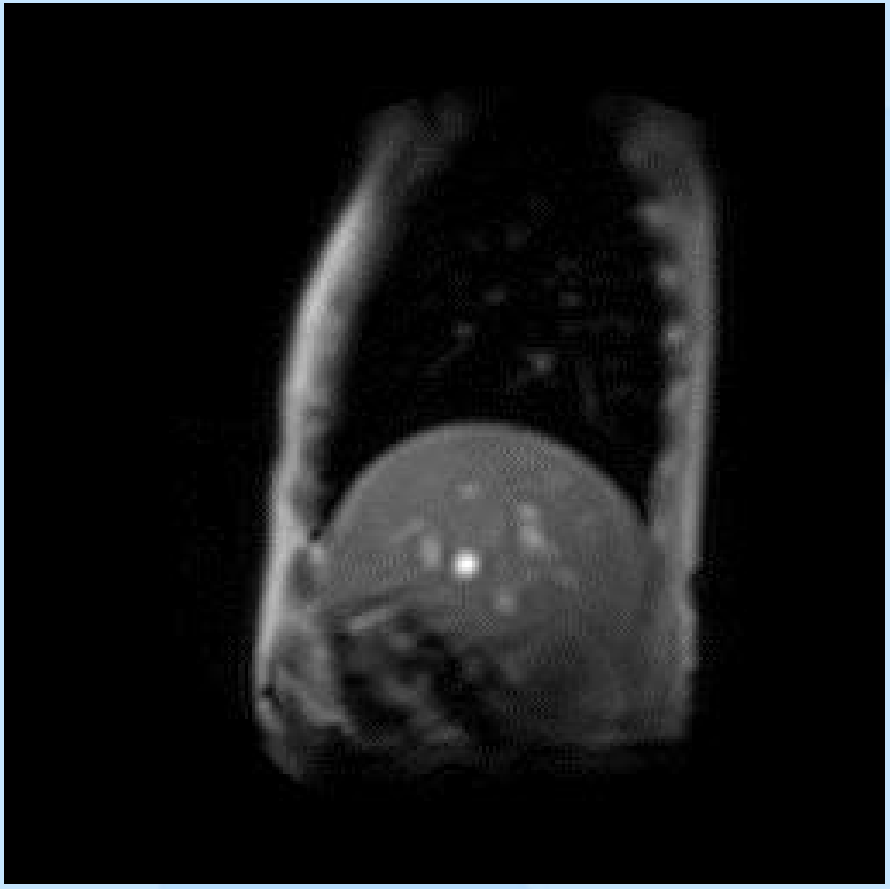

Repeated MRI cervix

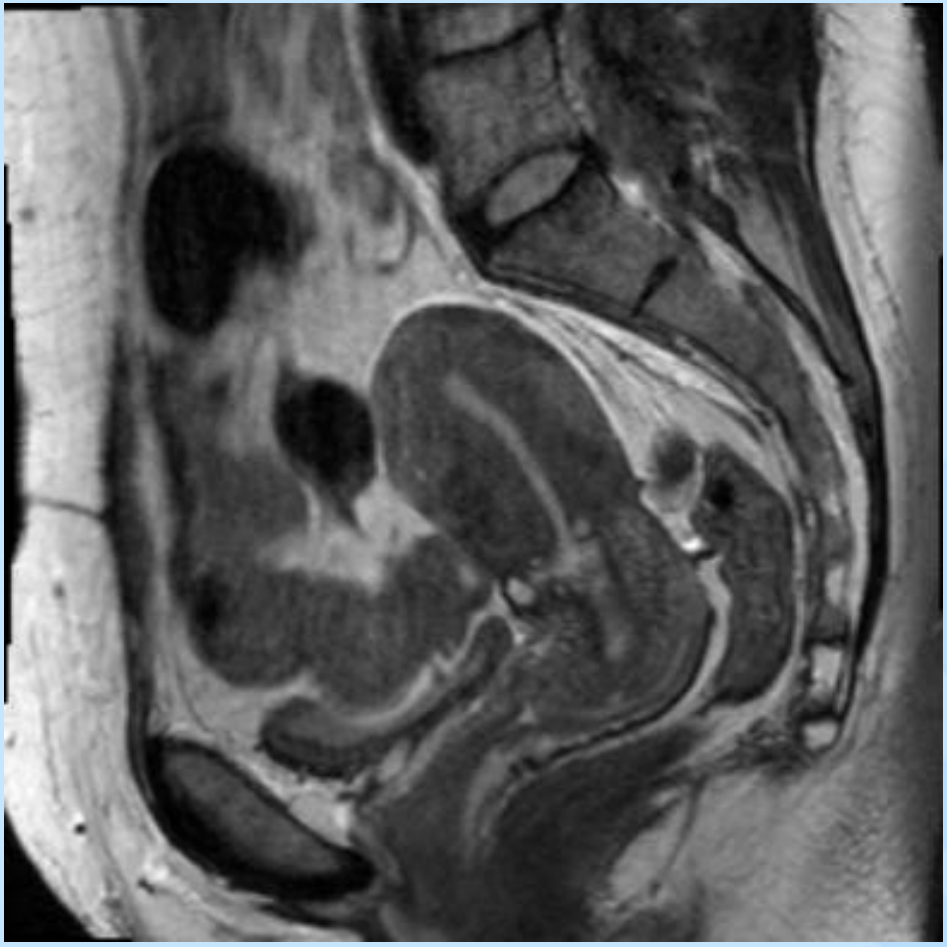

Besides positioning information:

Treatment response assessment

- evaluation of tumour regression
- dynamic evaluation of tumour characteristics like hypoxia

Tumour regression and IMRT re-planning

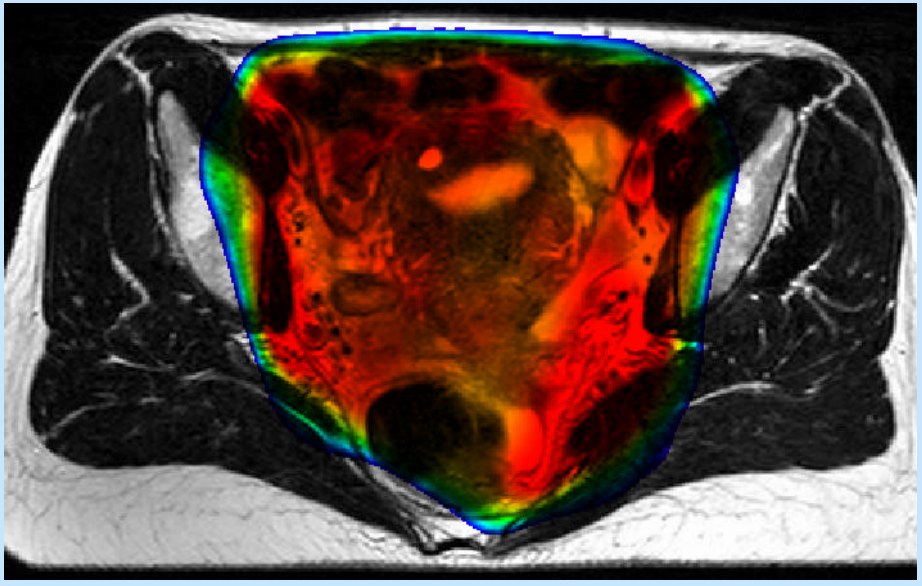

IMRT dose based on pre-treatment MRI

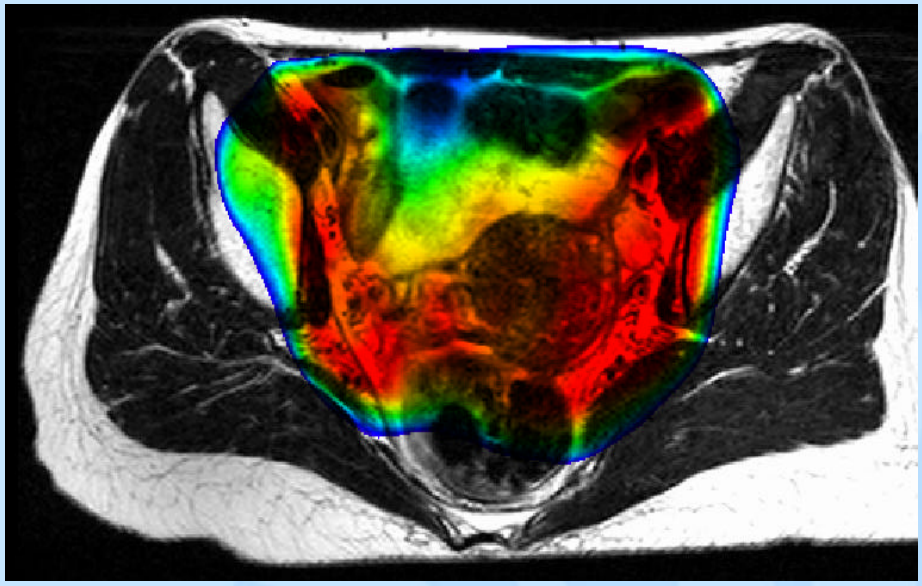

IMRT dose based on MRI after half radiotherapy course

Functional example

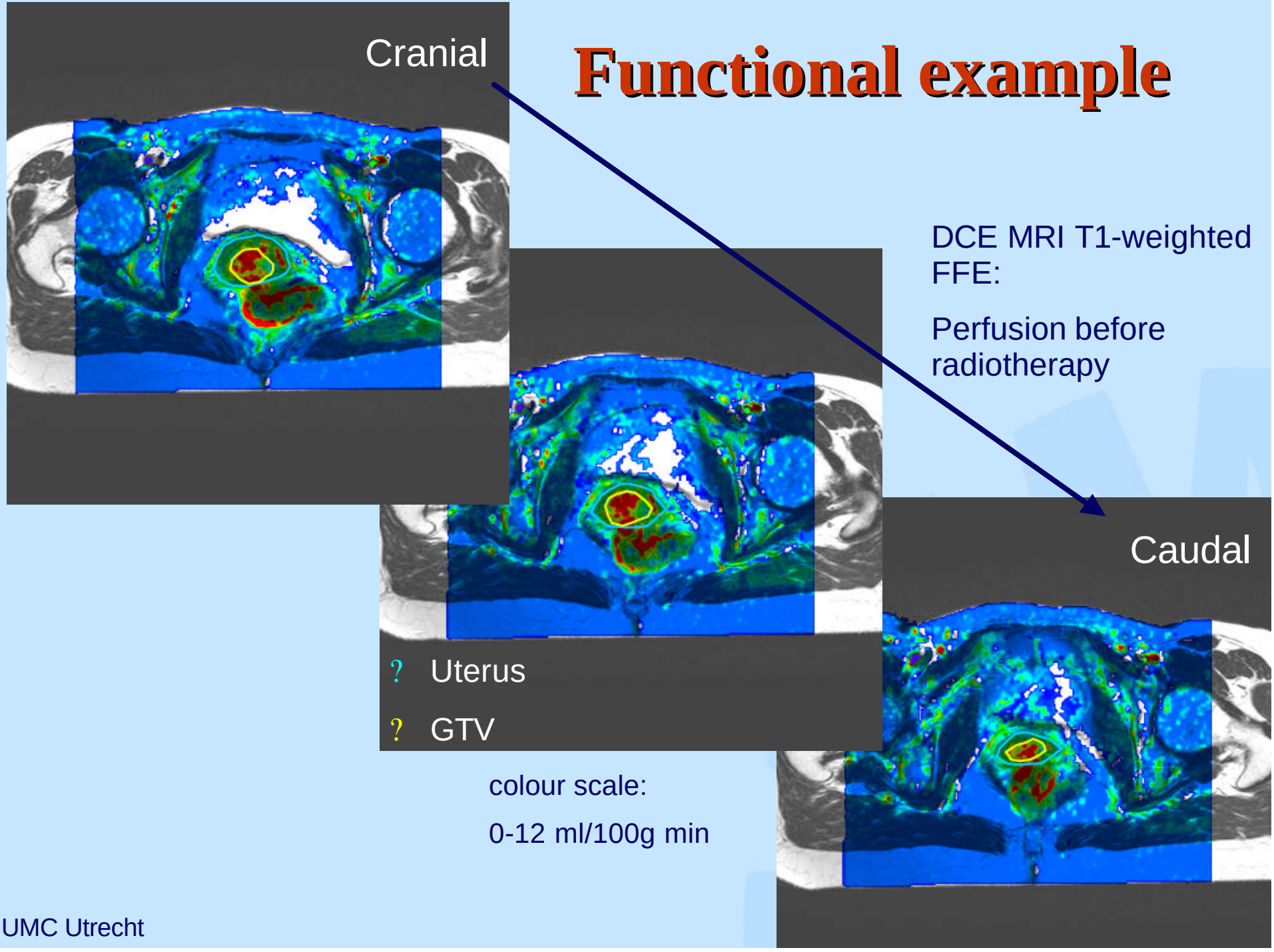

DCE MRI T1-weighted FFE:

Perfusion before radiotherapy

? Uterus

? GTV

colour scale:

0-12 ml/100g min

Dynamic treatment response assessment perfusion

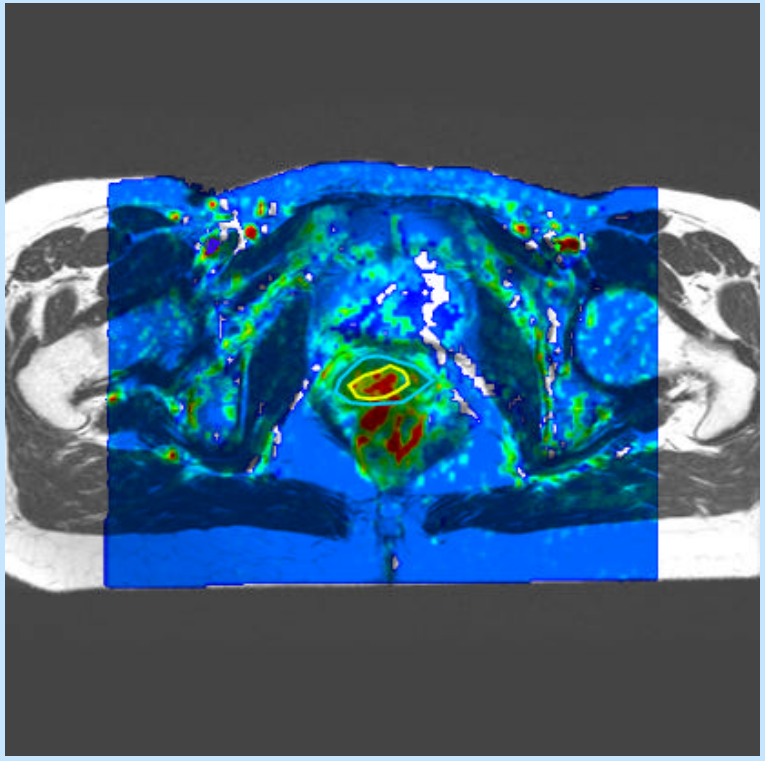

Perfusion before RT

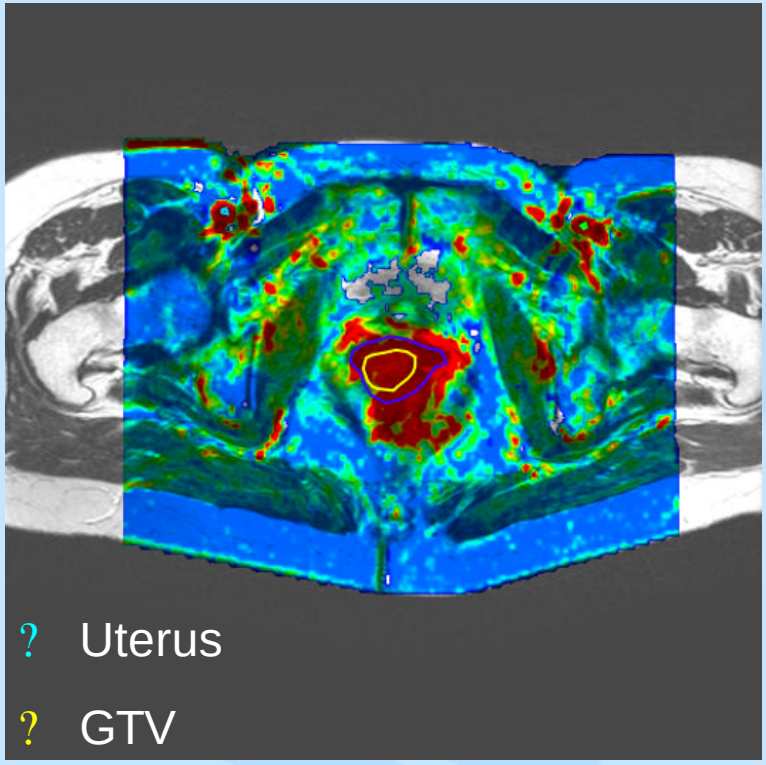

Perfusion 1 week after start RT

? Same colour scale:

0-12 ml/100g min

In room MRI

- superb soft tissue visualisation high field MRI (1.5 T, 3 T)
- dynamic (on-line)
- tumour characteristics
- tumour response assessment
- registration with dose distribution

Integrating a MRI scanner with a radiotherapy accelerator

Radiotherapy accelerator

1.5 T or 3 T MRI system

Hybrid MRI-linear accelerator

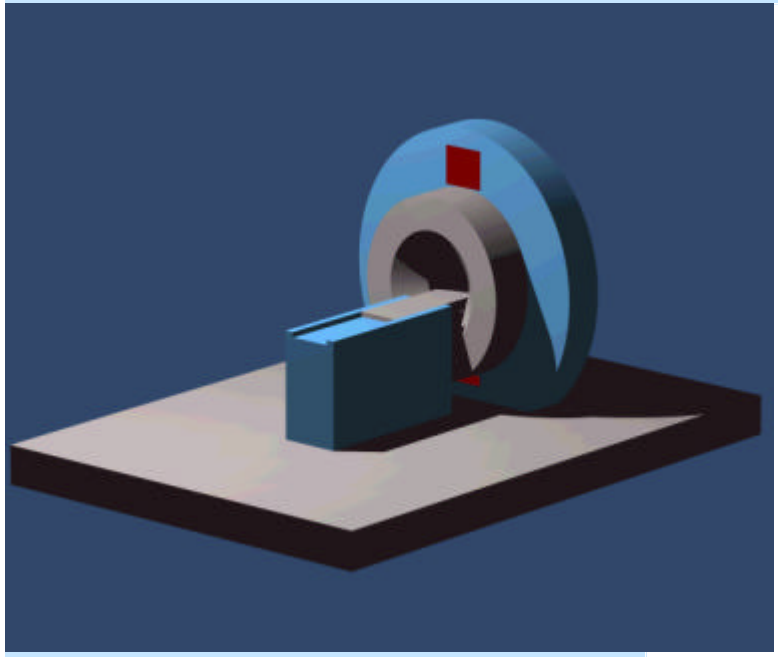

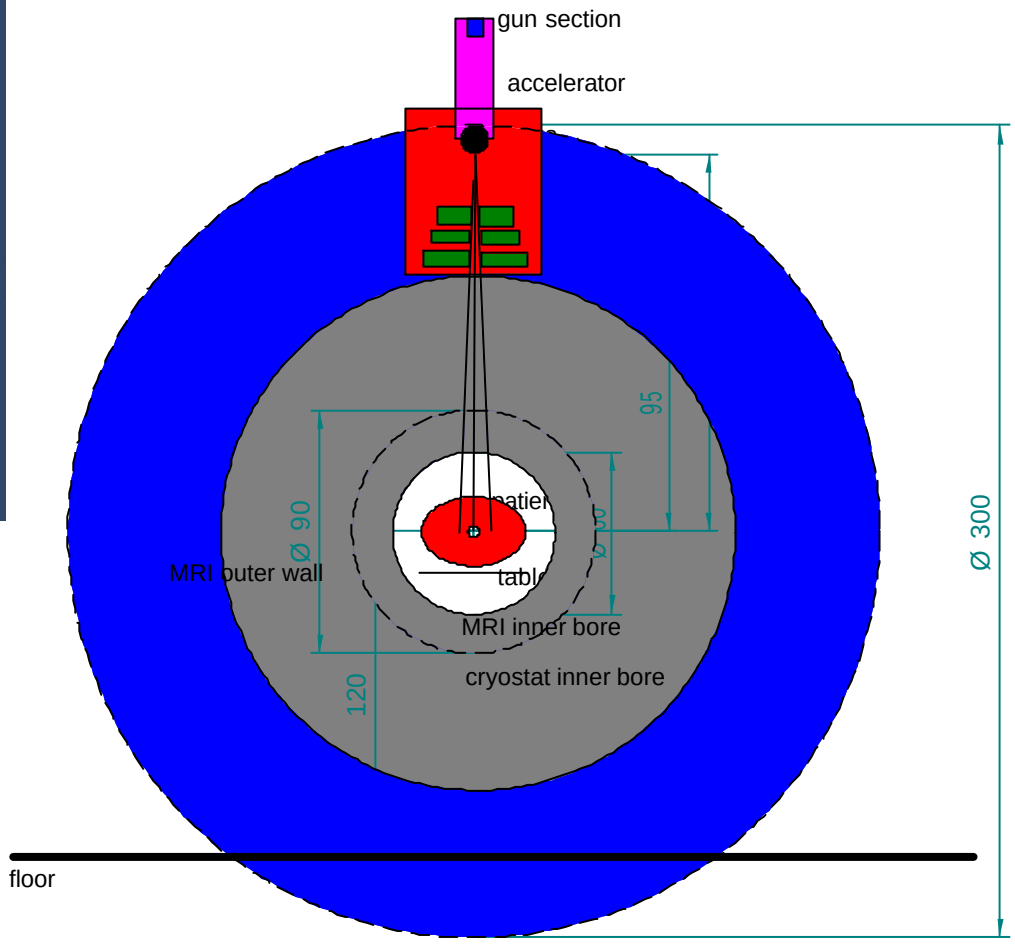

UMC Utrecht

Technical feasibility of a hybrid MRI-accelerator

Potential project killers:

- Magnetic coupling accelerator and MRI system
- Beam transmission through MRI system
- Dose deposition in 1.5 T magnetic field

Technical feasibility of a hybrid MRI-accelerator

Potential project killers:

- Magnetic coupling accelerator and MRI system
- Beam transmission through MRI system
- Dose deposition in 1.5 T magnetic field

Principle of active B field shielding

Primary field configuration

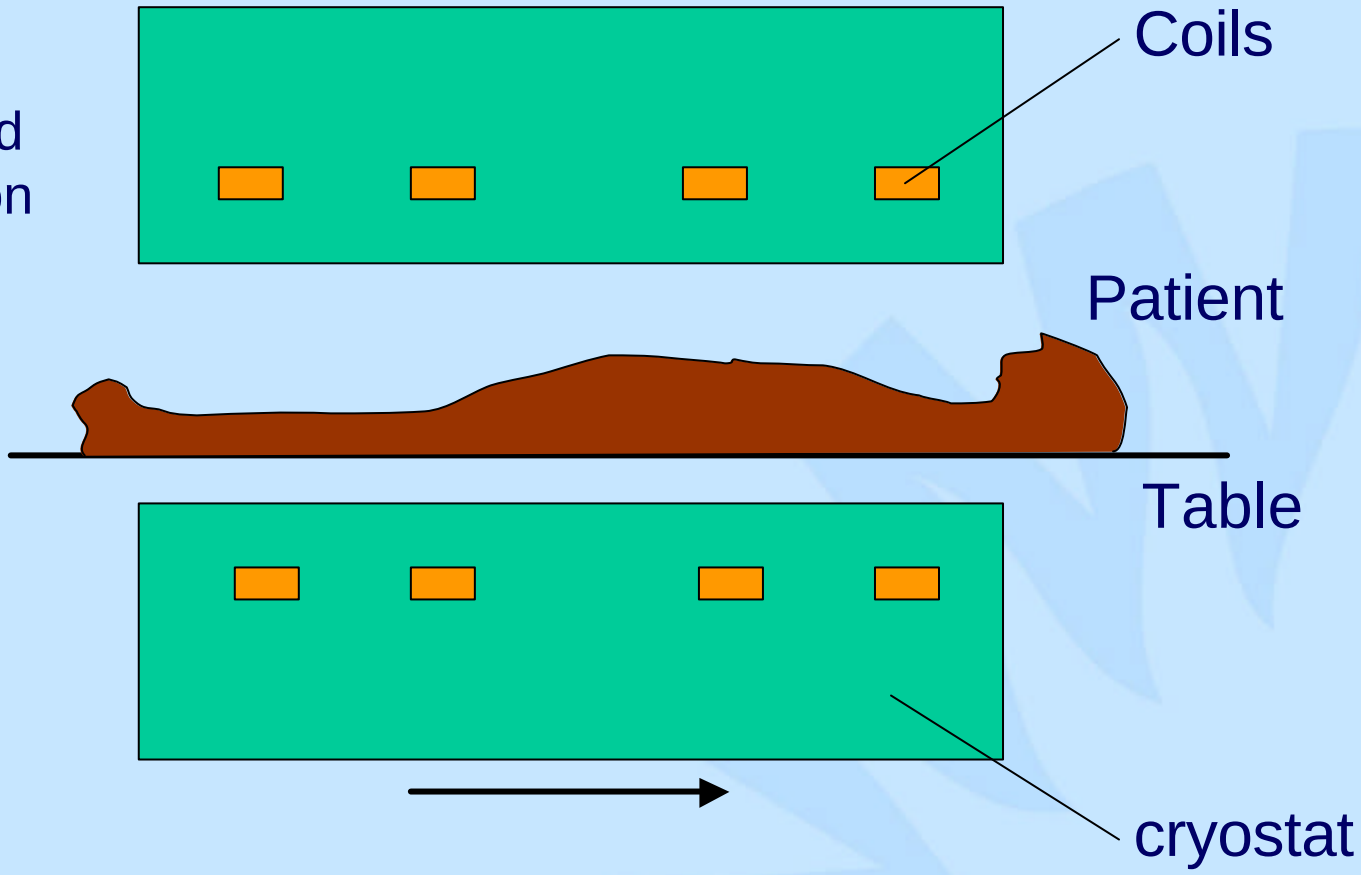

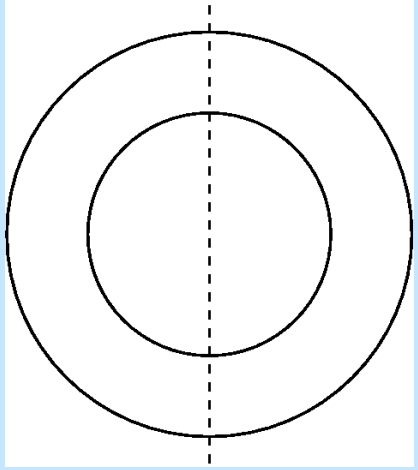

Principle of active B field shielding

Primary field configuration

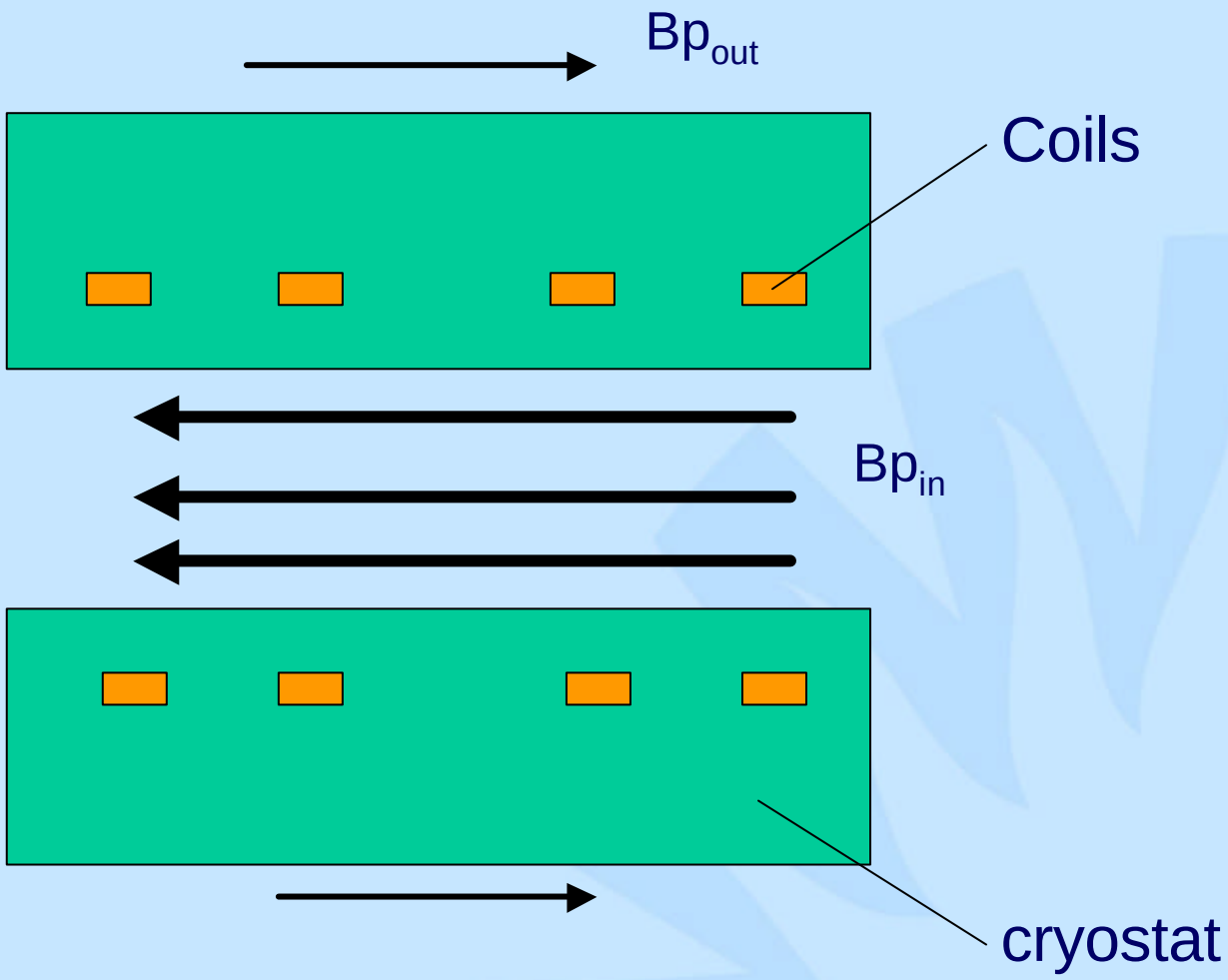

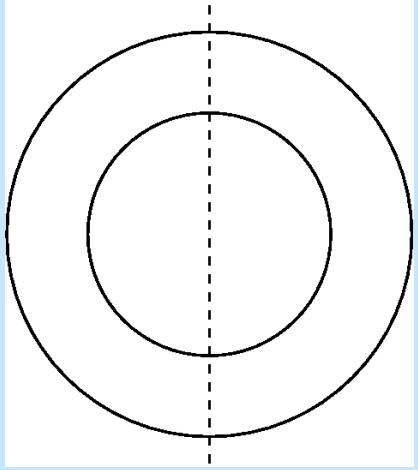

Principle of active B field shielding

Compensation field configuration

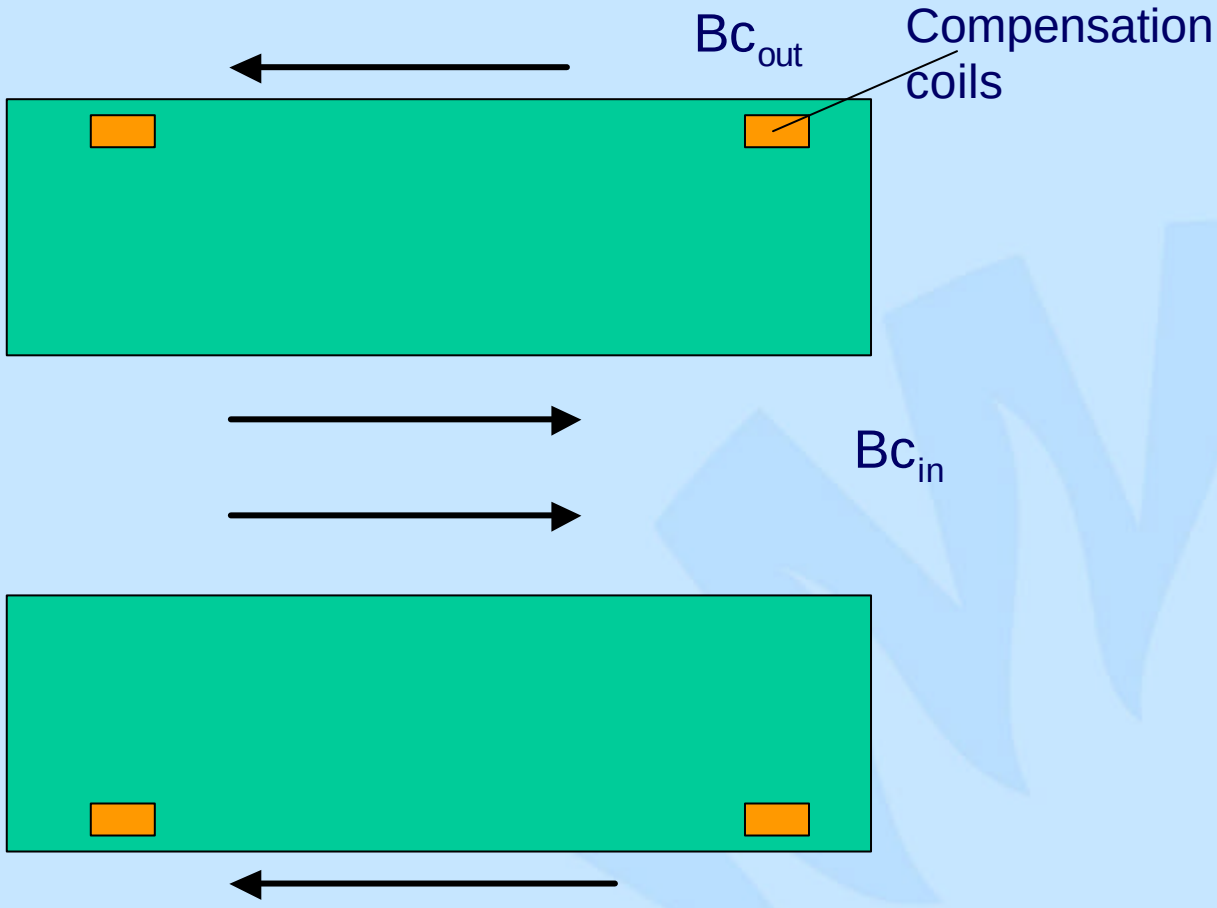

Principle of active B field shielding

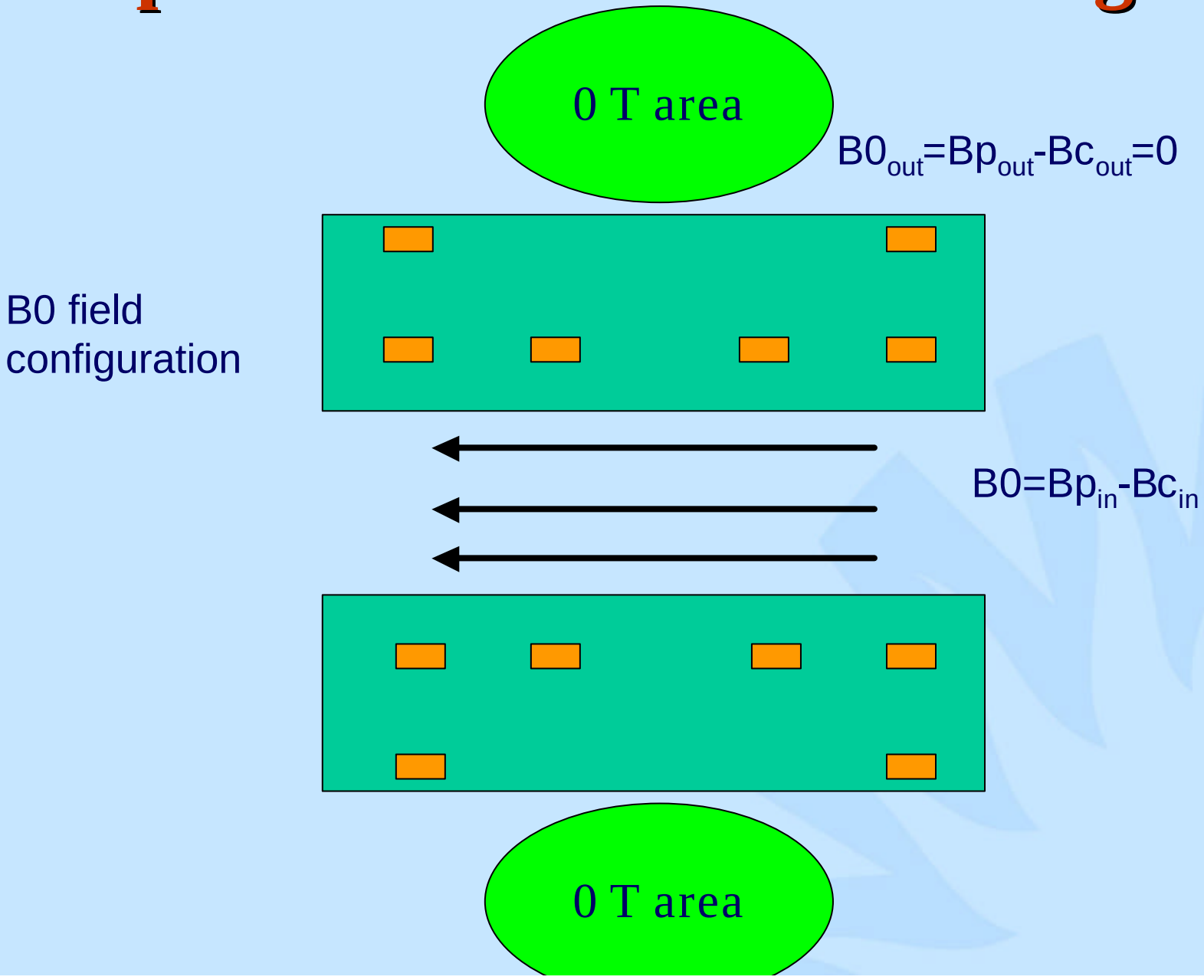

Location of accelerator

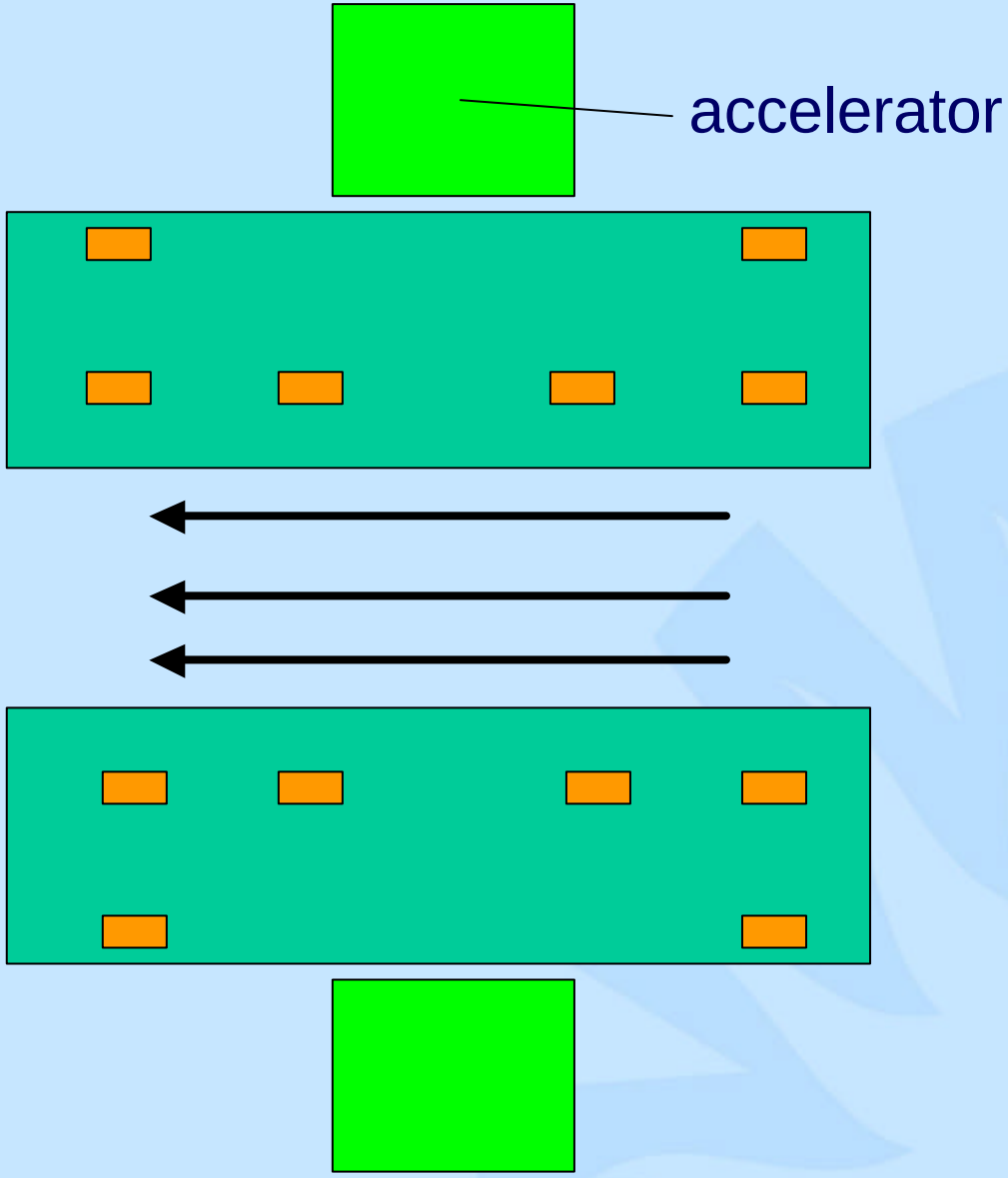

Coil configuration hybrid system

window for beam

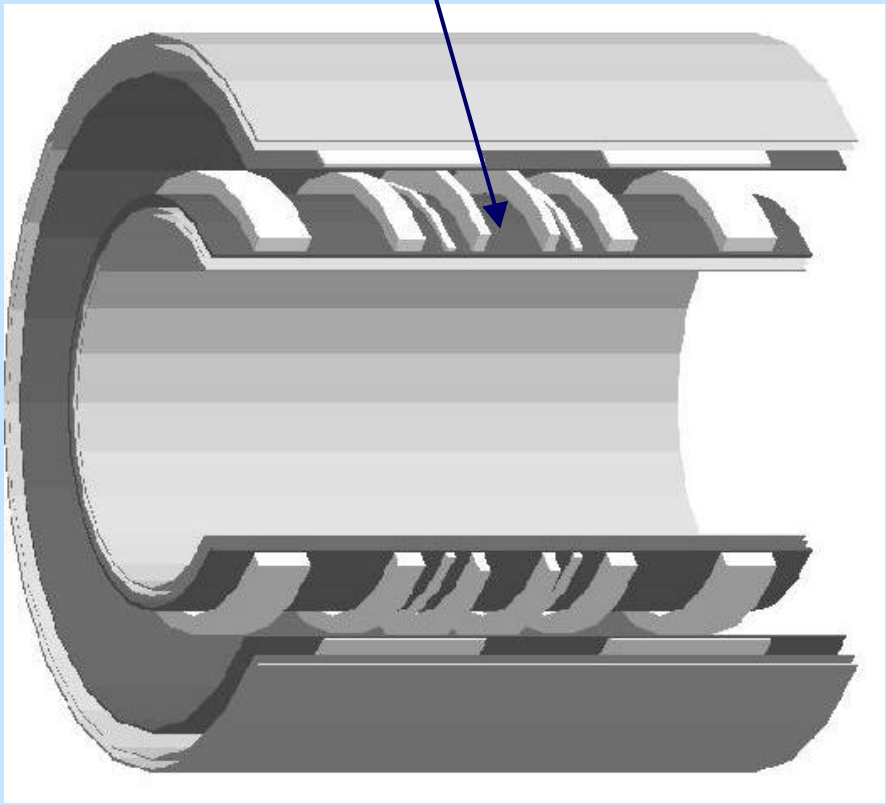

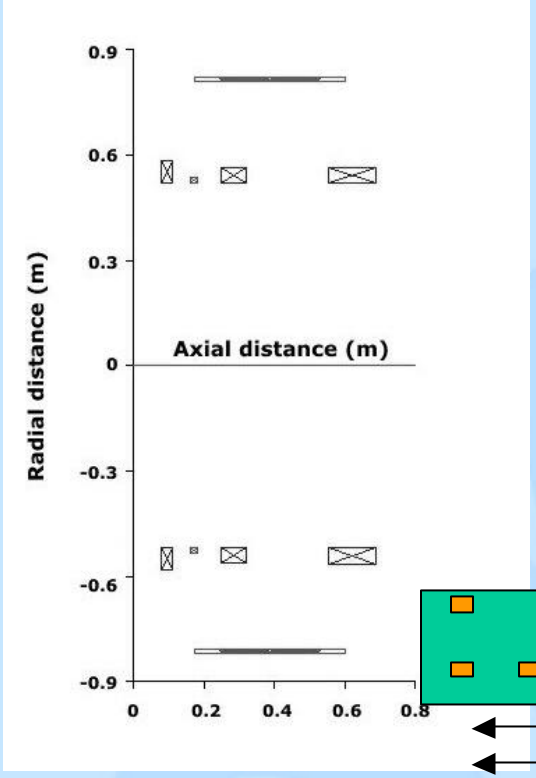

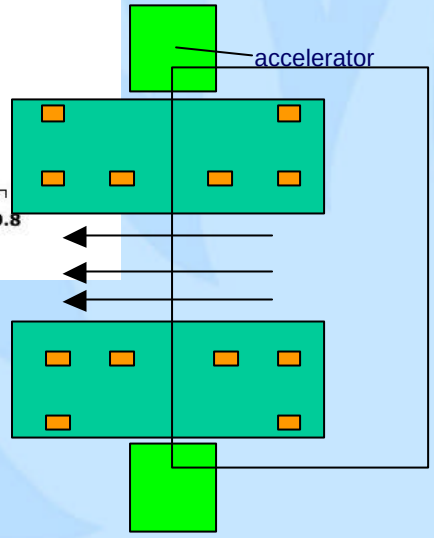

Field map 1.5 T RT magnet

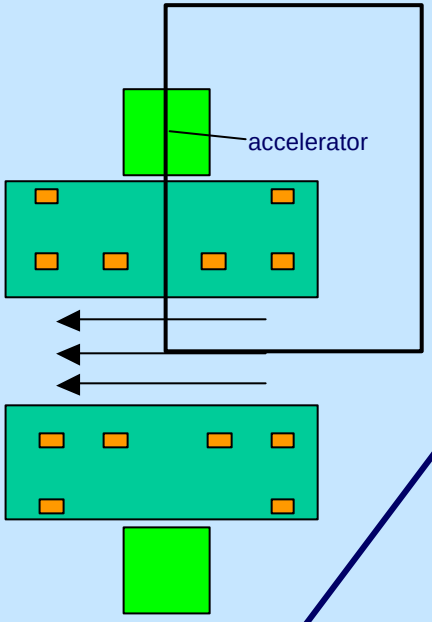

location gun < 1 mT

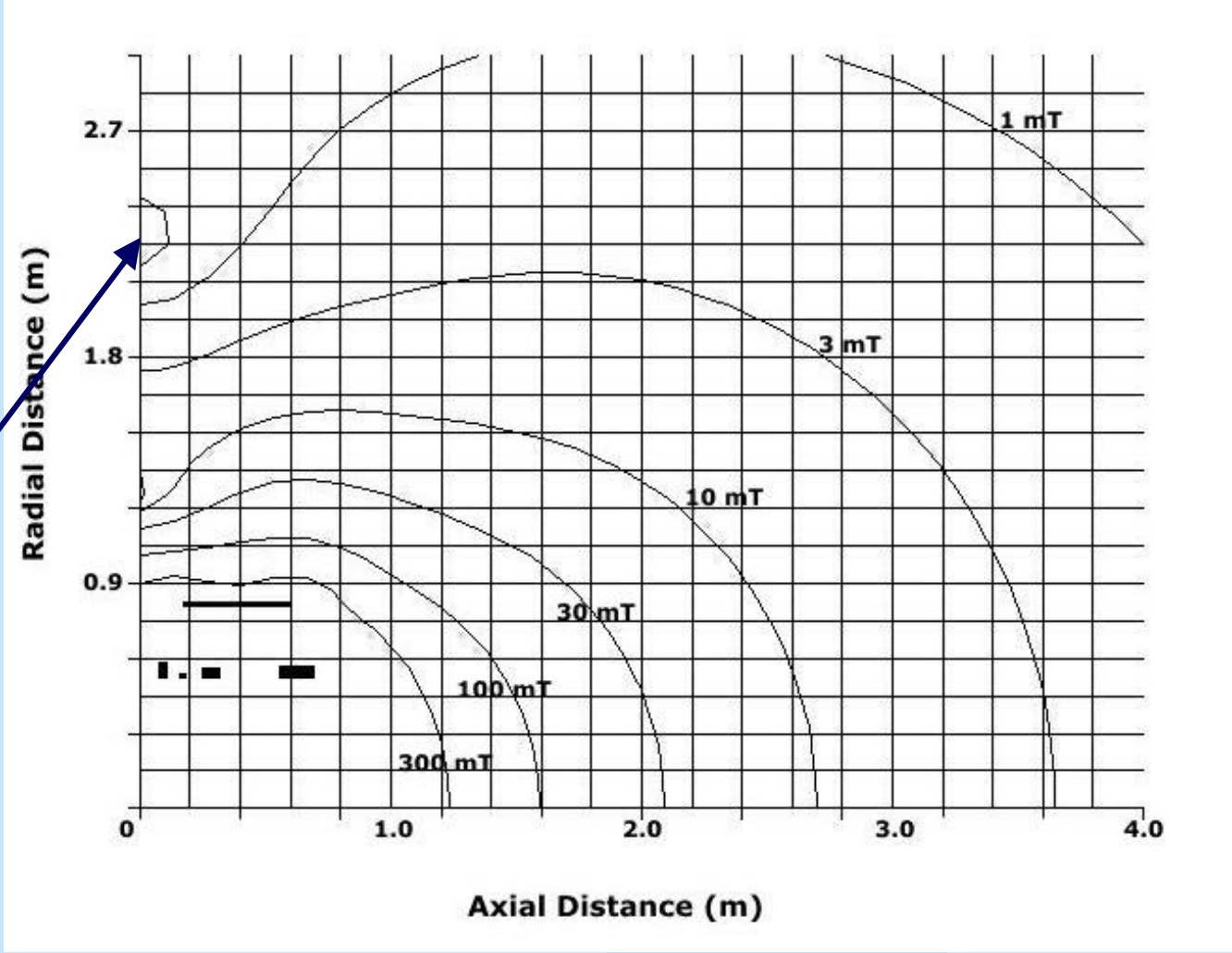

Magnetic interference

- Active magnetic shielding
  - Low field toroid around MRI to position the linac
  - Low far field to allow installation in vicinity of other linacs
- No significant compromise performance
- Not much different in manufacture
- Design also feasible with 3 T

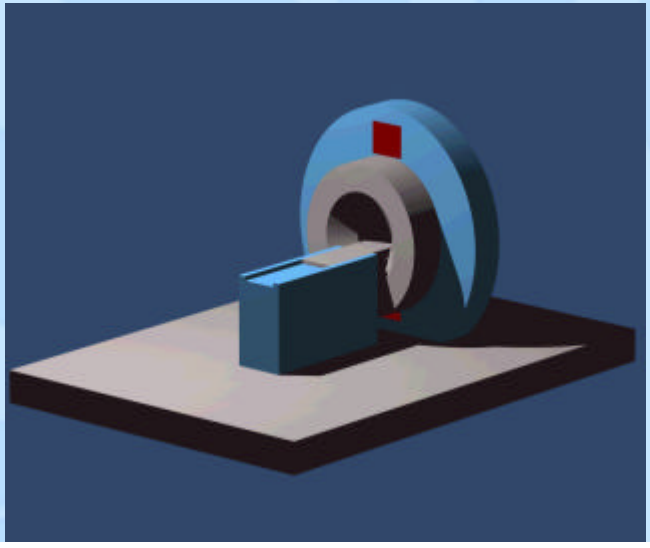

Technical feasibility of a MRI accelerator combination

Potential project killers:

- Magnetic coupling accelerator and MRI system
- Beam transmission through MRI system
- Dose deposition in 1.5 T magnetic field

Supporting structures MRI (Philips)

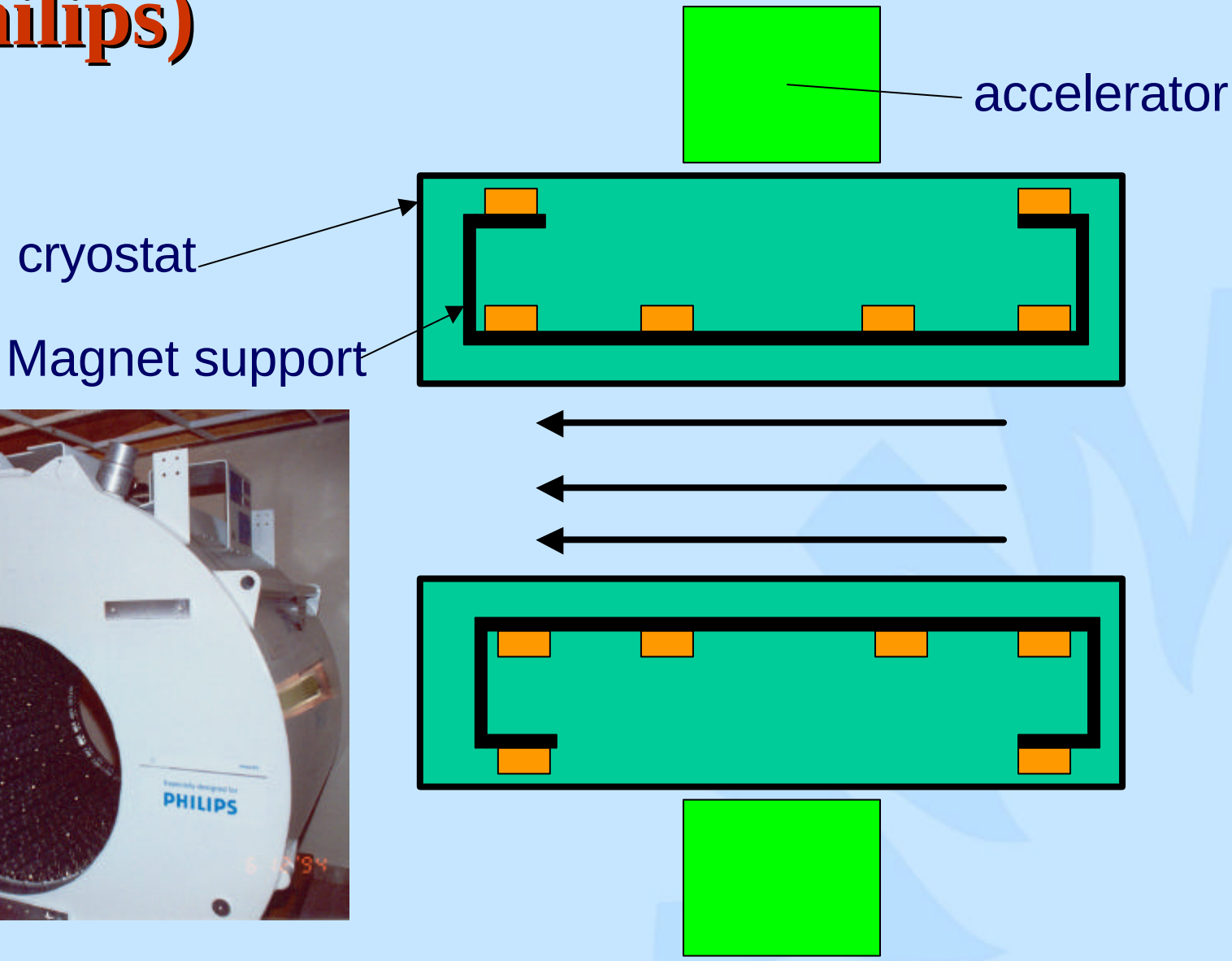

Gradient and rf coils

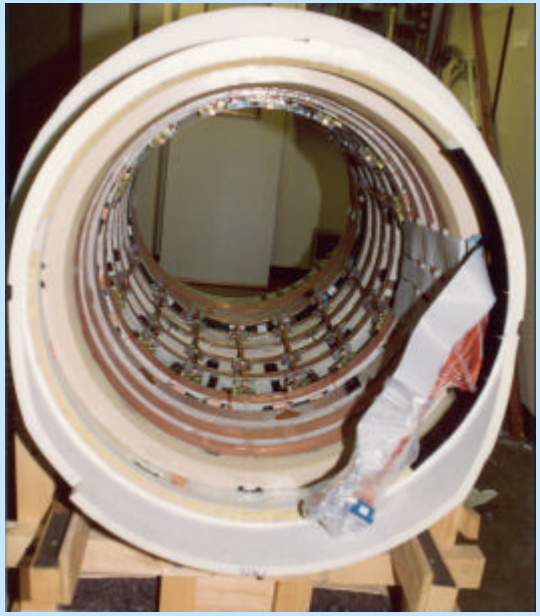

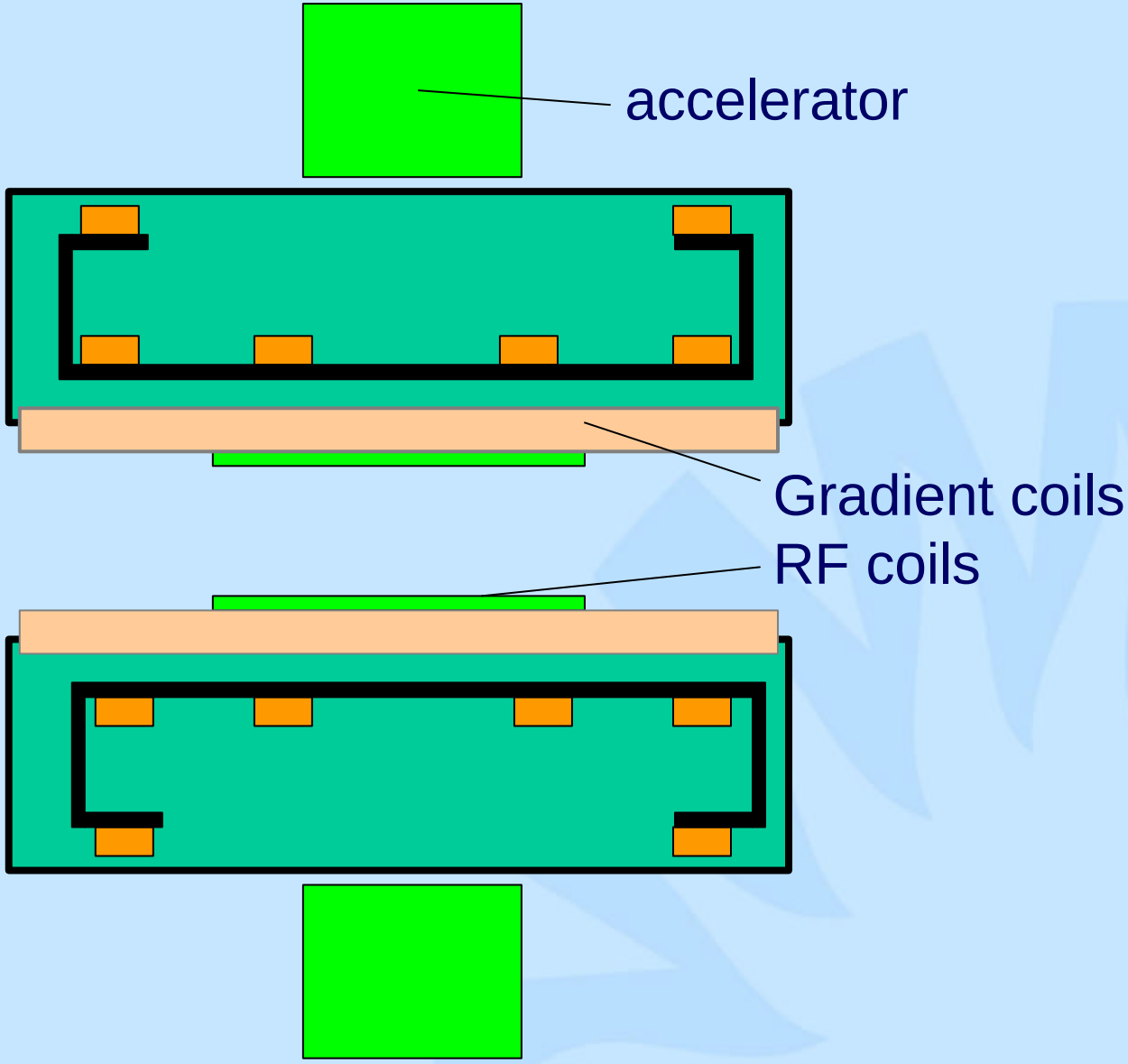

Transmission through magnet, gradient and rf coils

Currently:

- Cryostat 5cm Al + 1 cm steel
- Gradient coils 8 cm epoxy + up-to 4 cm Cu
- rf coils few mm Cu

Gradient coils highly heterogeneous

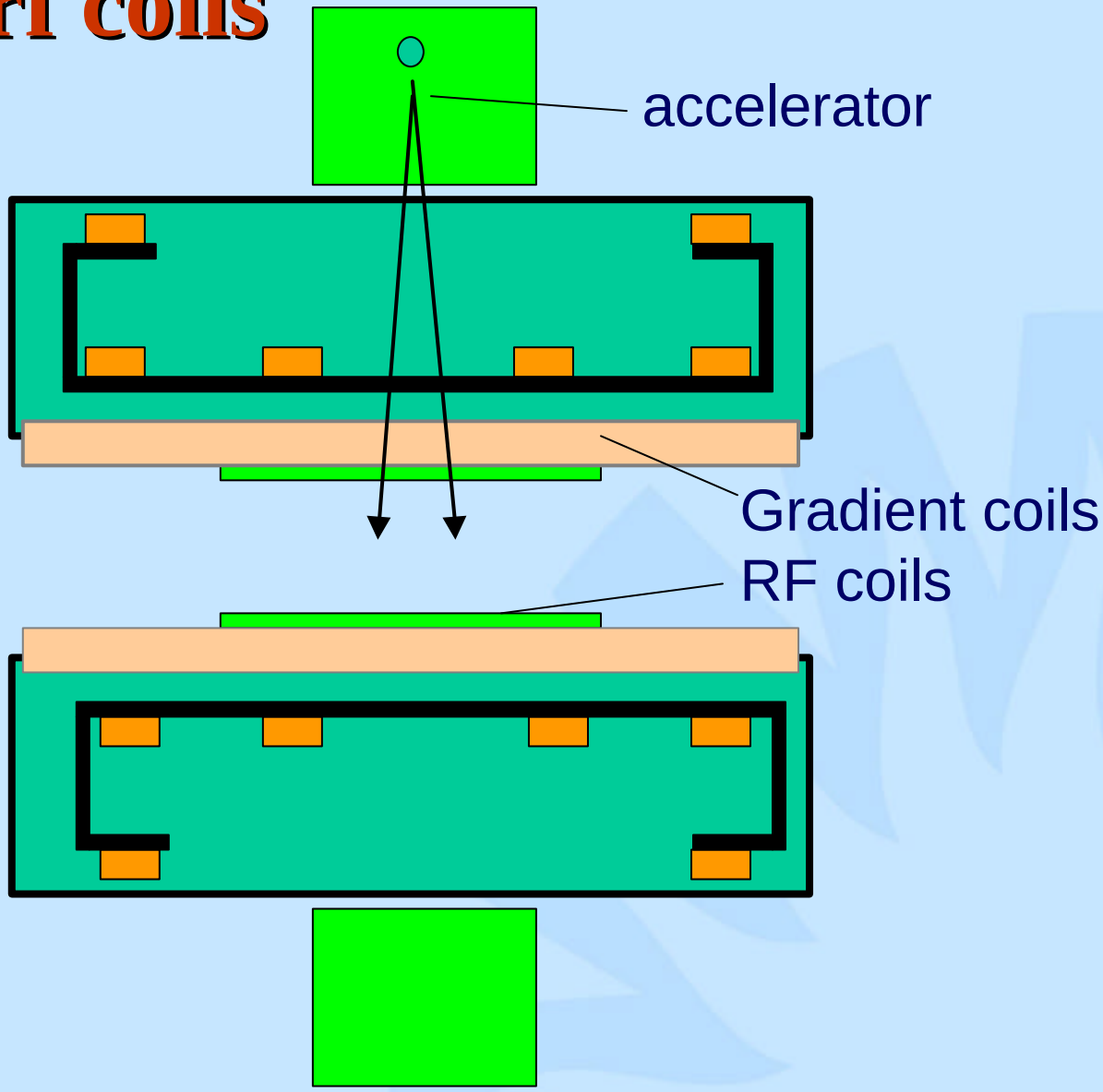

Radiation windows

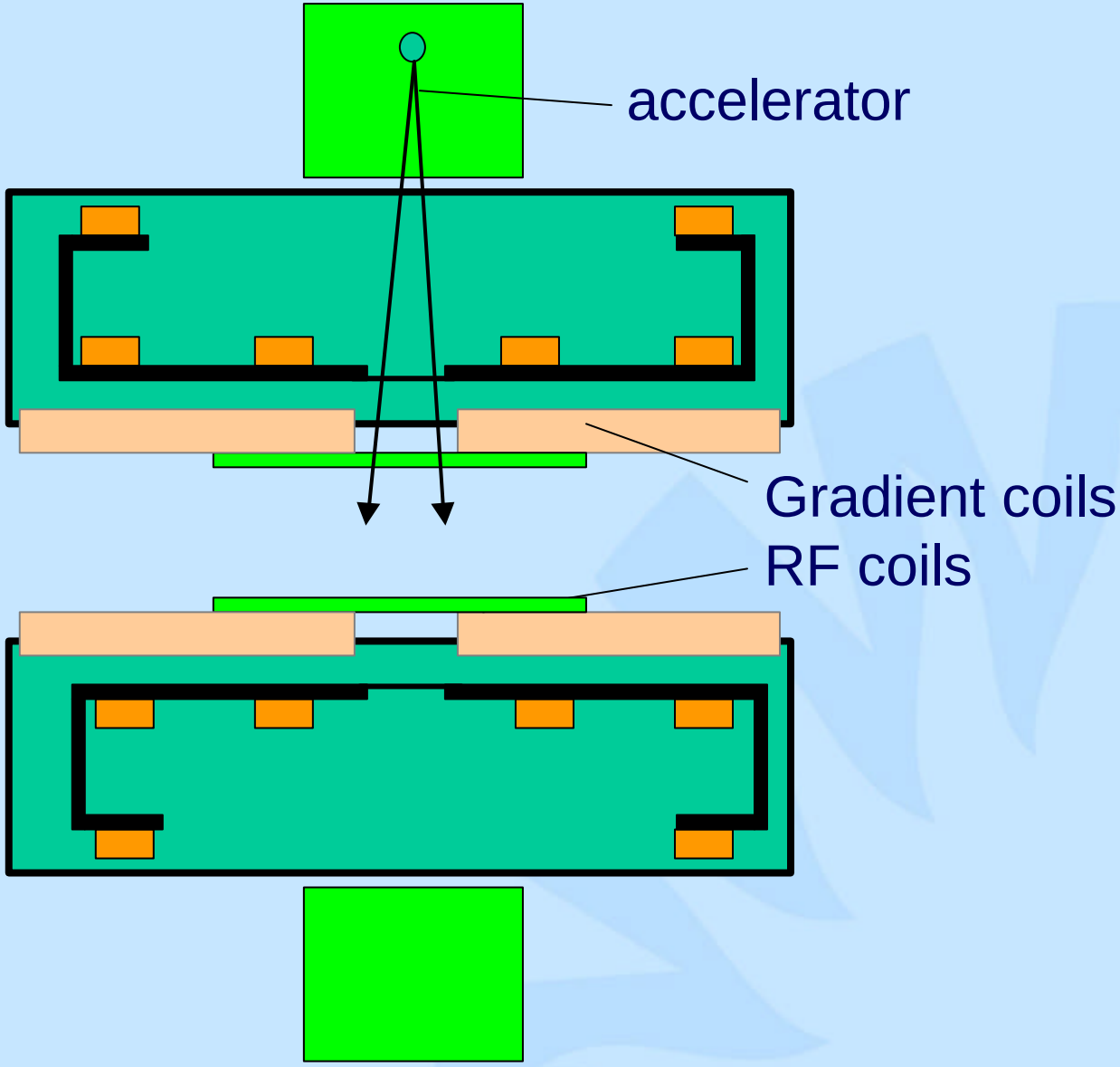

Geant4 modelling of Elekta SLi25-15

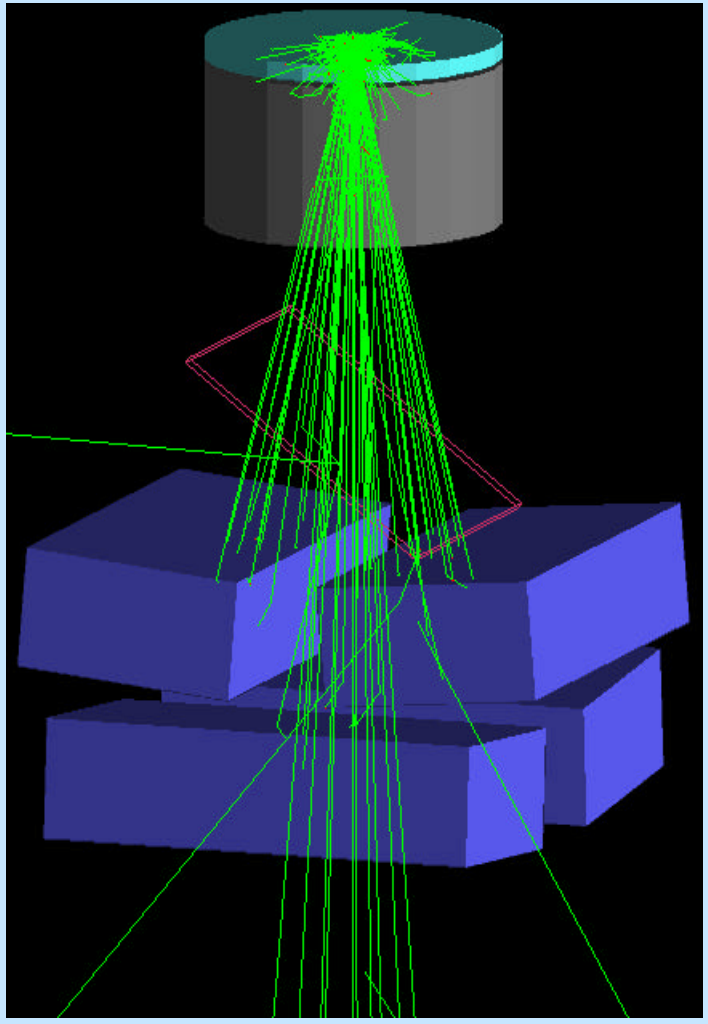

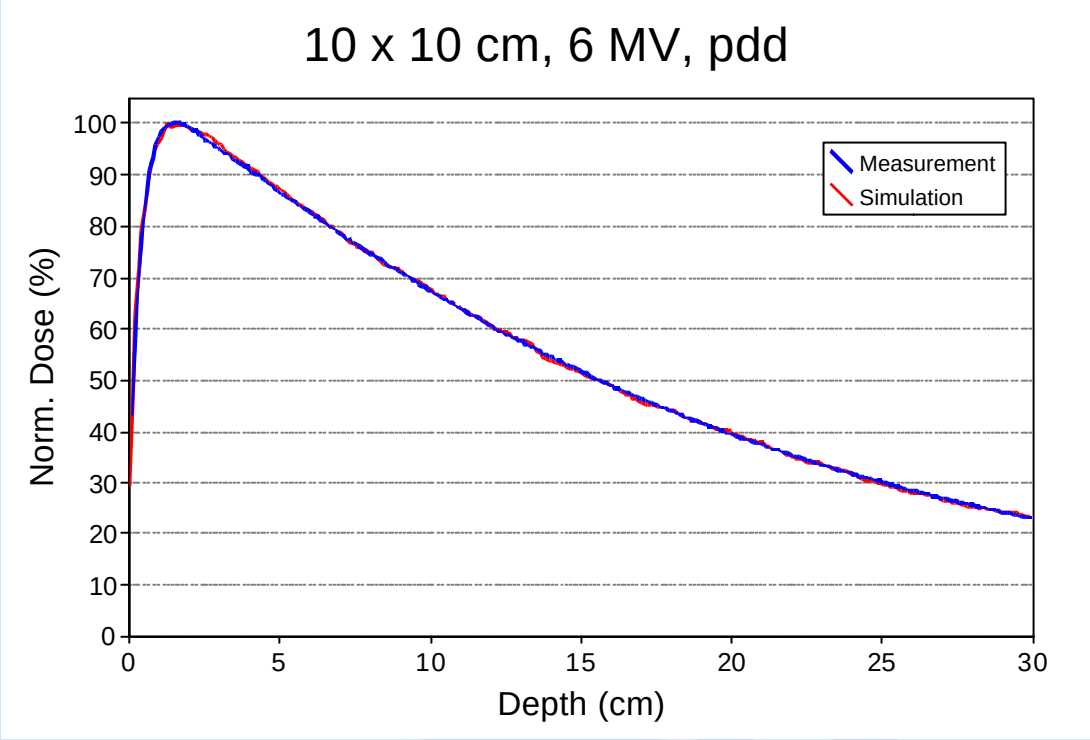

Pdd for a 10x10 field

Geant4 freely available at CERN: geant4.web.cern.ch

Scatter induction in MRI accelerator geometry

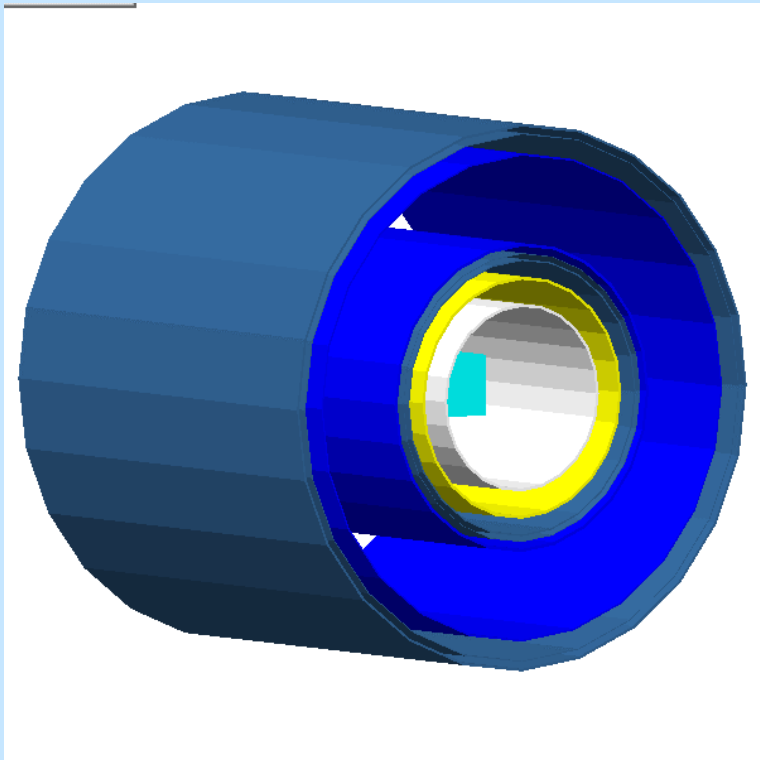

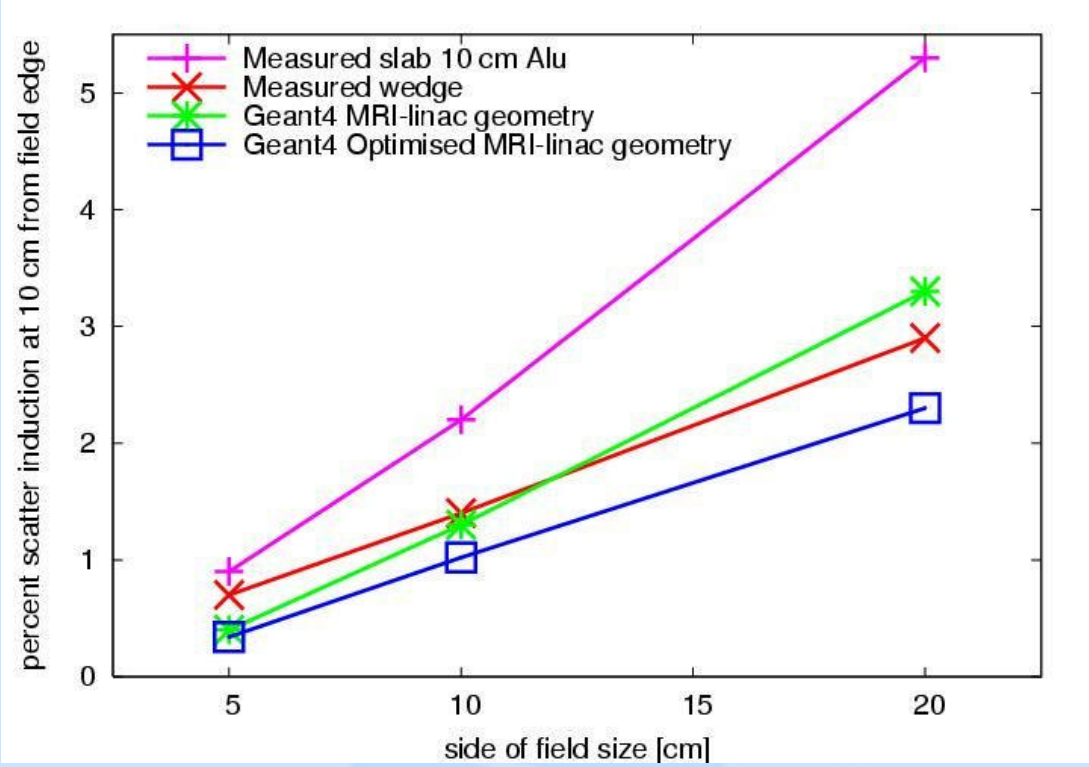

8 concentric layers aluminium, steel, expoxy. Equivalent to 7.5 cm alu. Optimised eq. 4.2 cm alu.

Conclusions beam transmission

- Geant4 allows “virtual” prototyping
- Scatter less compared to the scatter induced by a conventional wedge

Technical feasibility of a MRI accelerator combination

Potential project killers:

- Magnetic coupling accelerator and MRI system
- Beam transmission through MRI system
- Dose deposition in 1.5 T magnetic field

Dosimetry test site: 1.1 T Bruker magnet

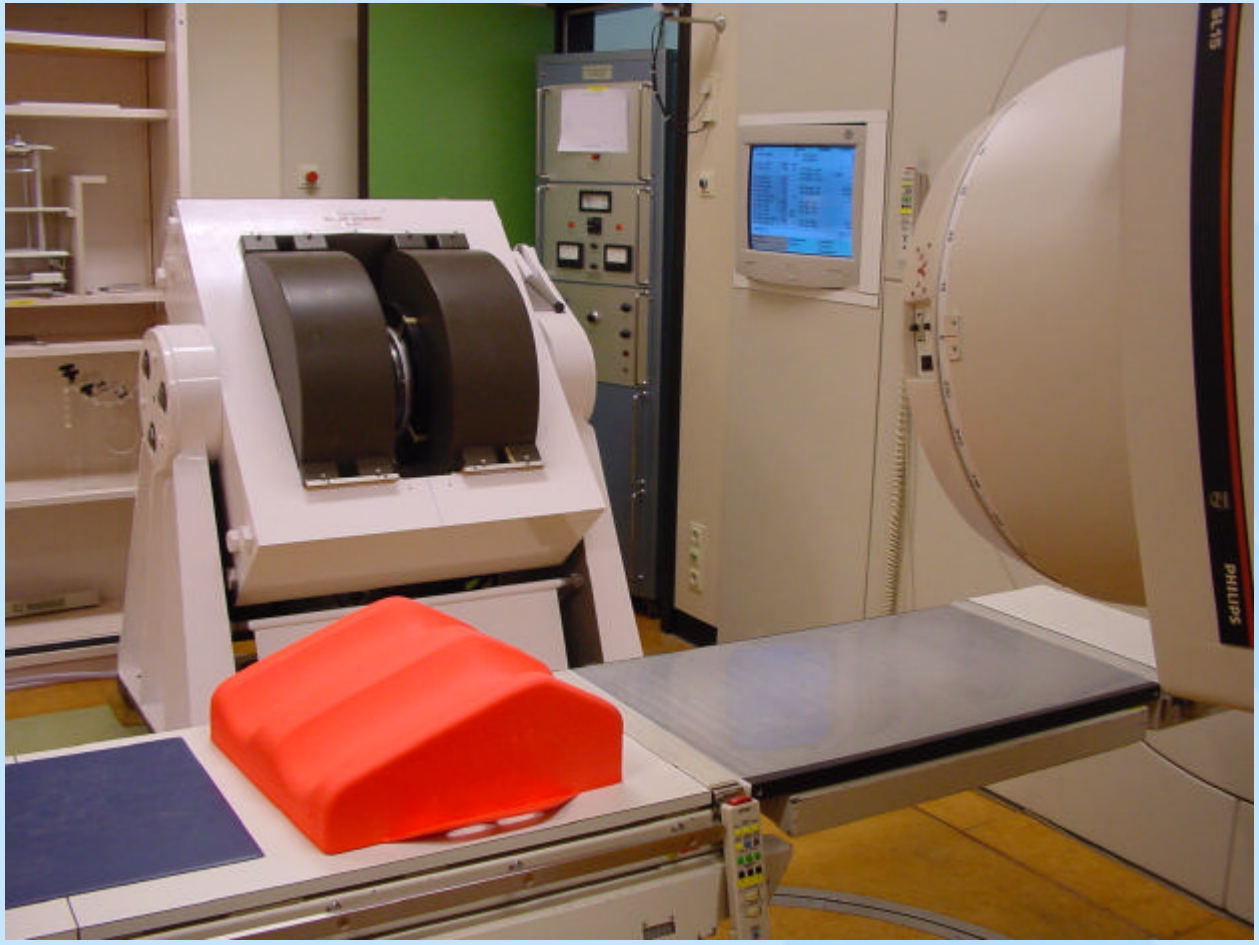

Electron beam in 1.1 T field, film measurements

20 MeV electron beam

No B field

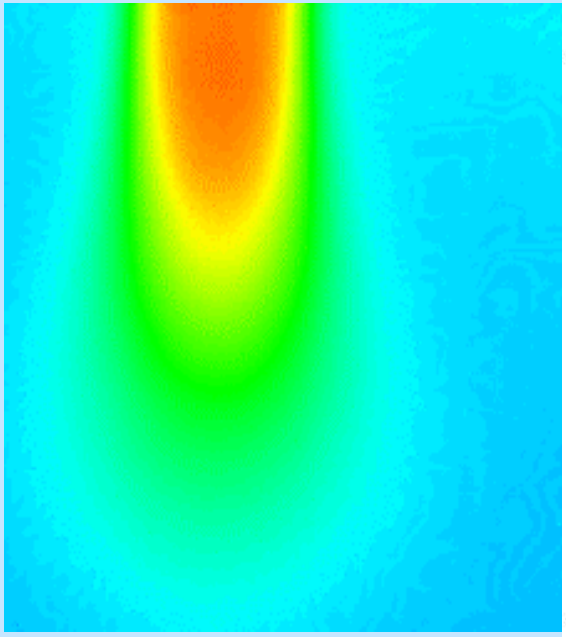

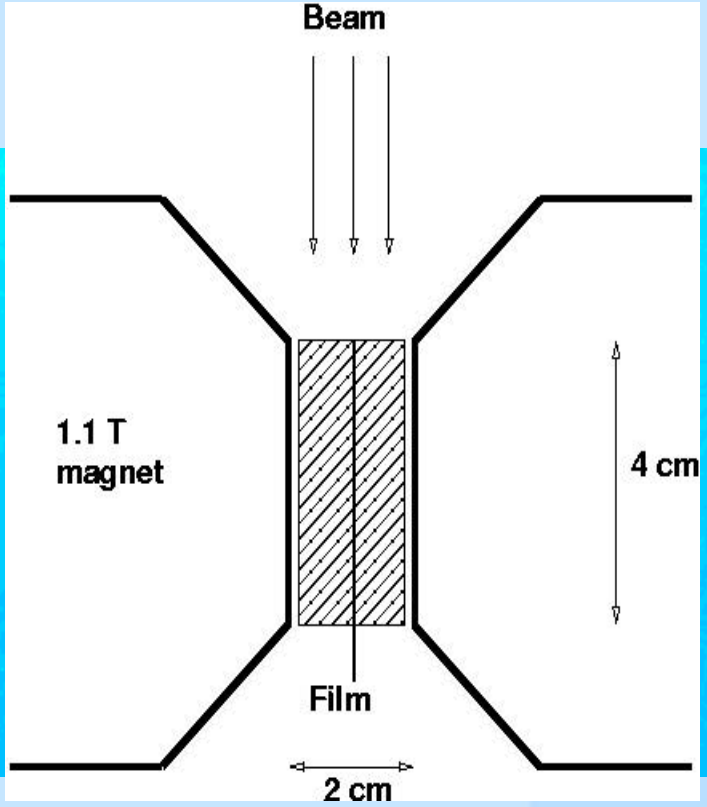

1.1 T field

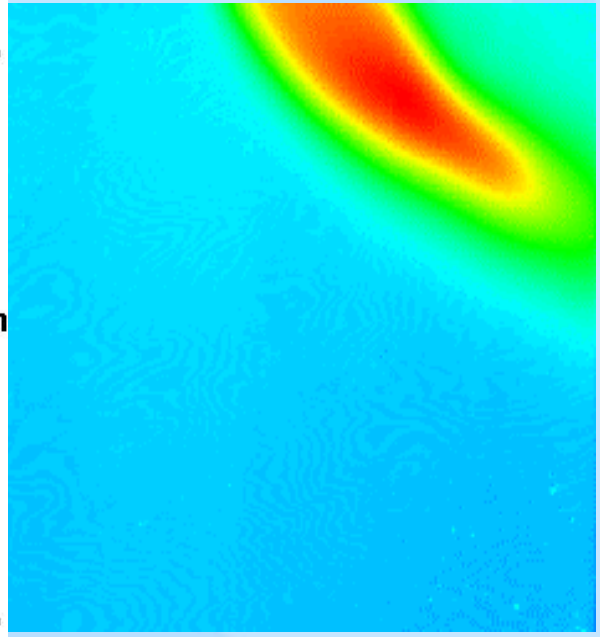

Photon beam in a 1.1 T field, film measurements

6 MV photon beam

No B field

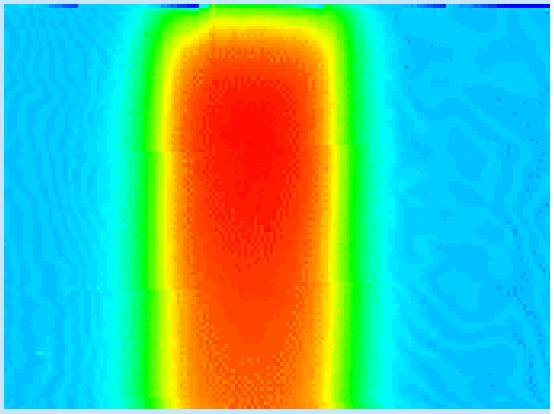

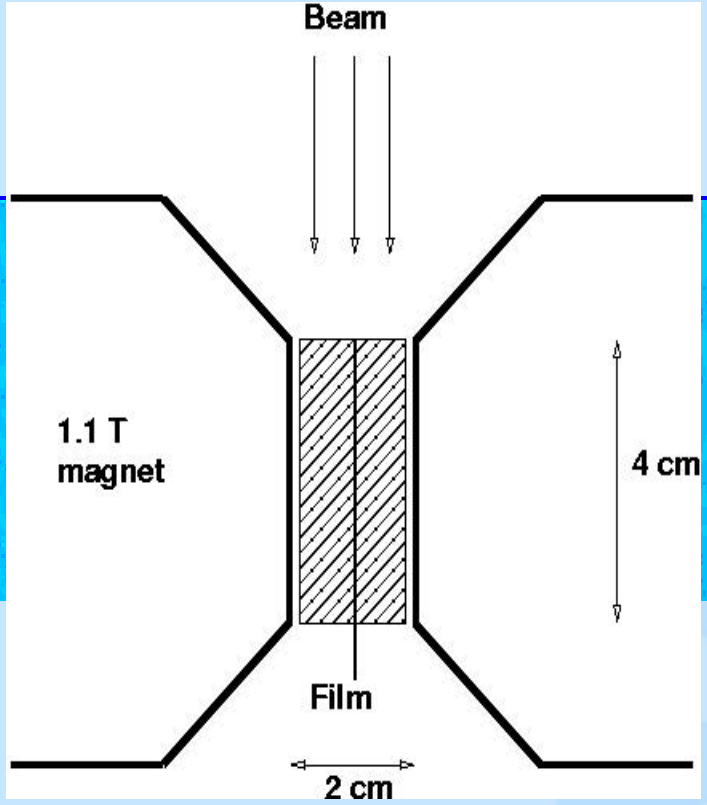

1.1 T field

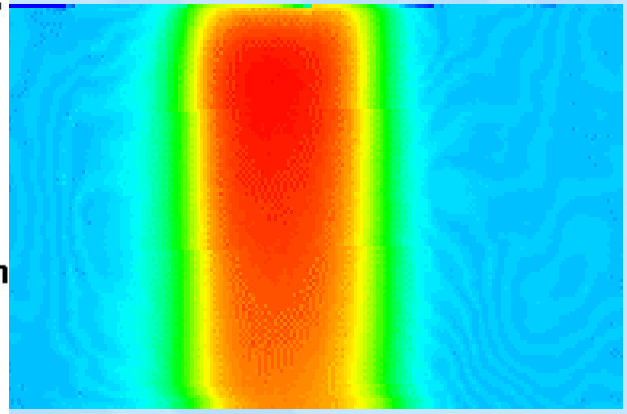

Pencil beam, beam's eye view

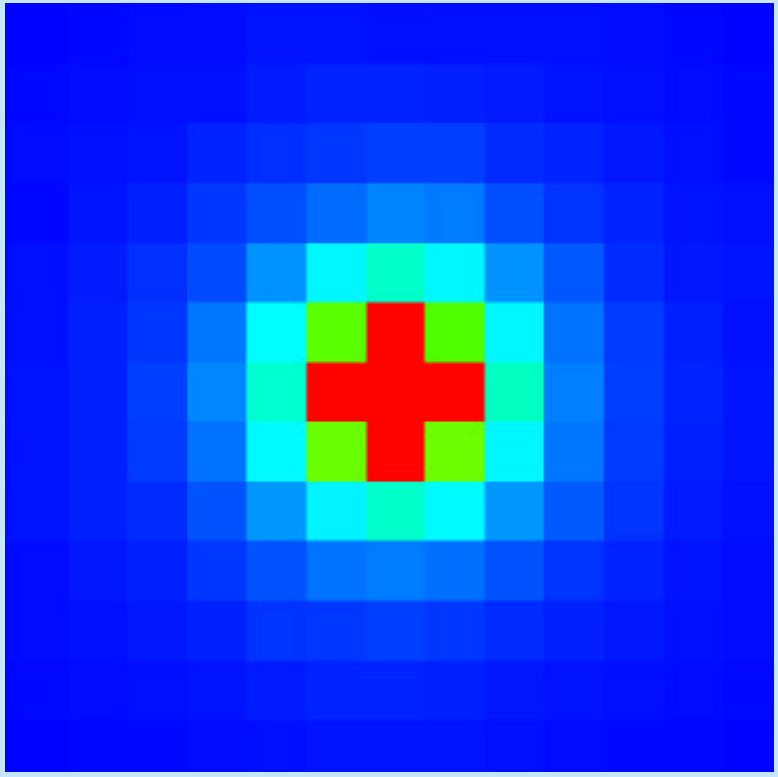

No magnetic field

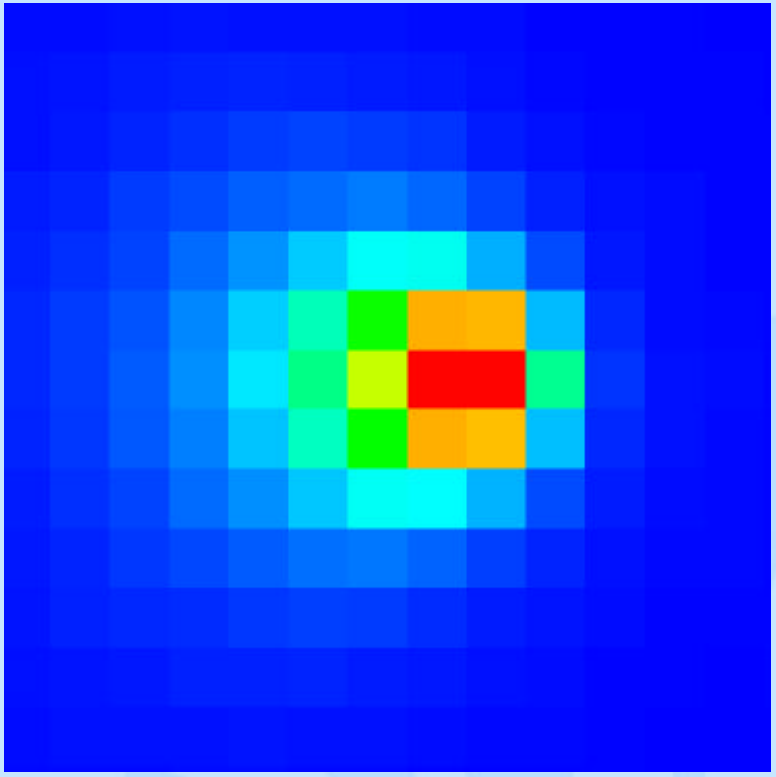

1.5 T magnetic field

6 MV photon beam, scaled on 10% of dose maximum

PDD 5x5 cm field and standard 10x10 cm field at 5 cm

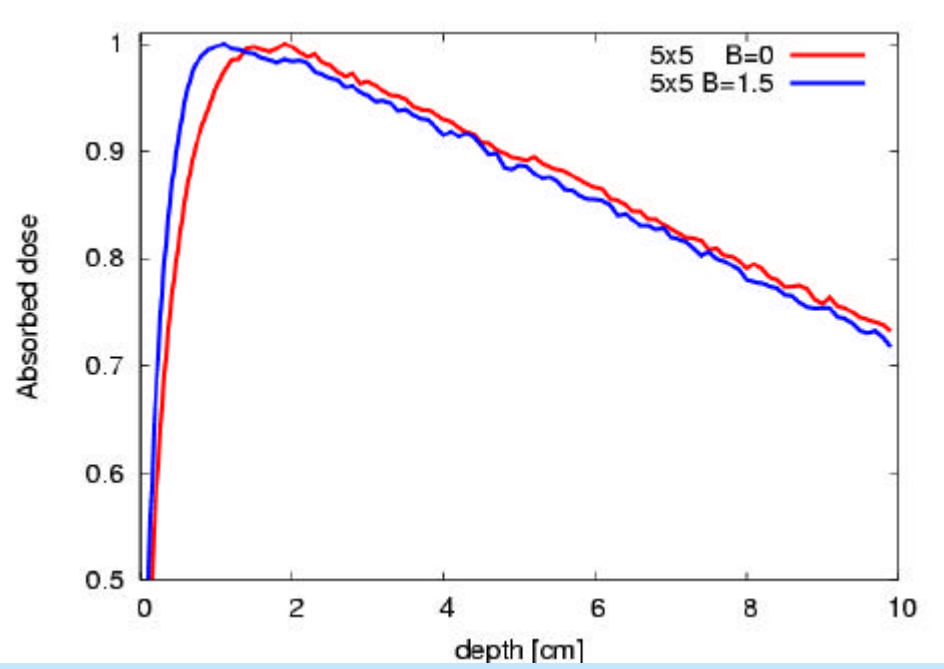

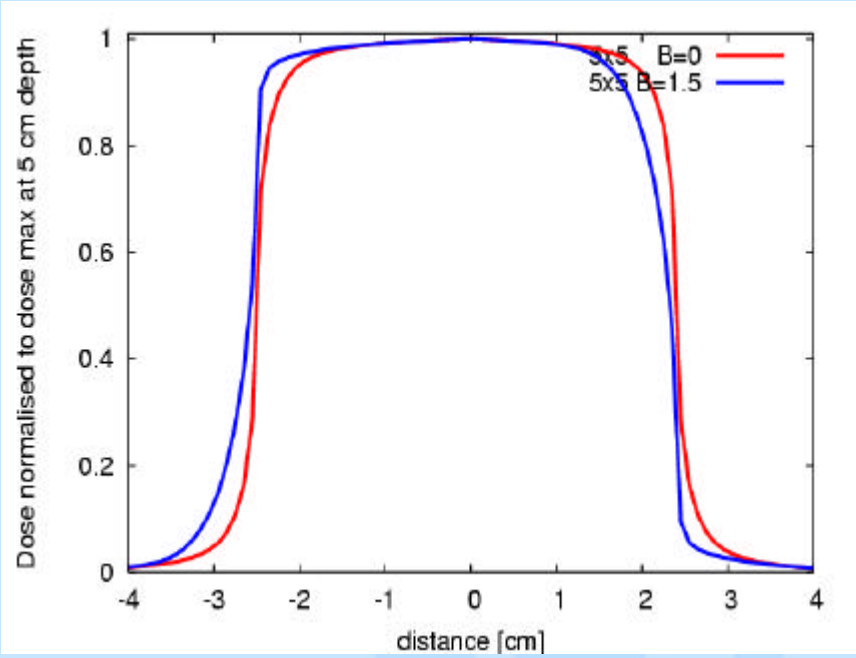

- Penumbra increase 1mm
- Buildup decrease 4-5 mm
- Field shifted 0.7 mm
- Field width unaffected

Dose deposition at tissue-air interfaces: the Electron Return Effect (ERE)

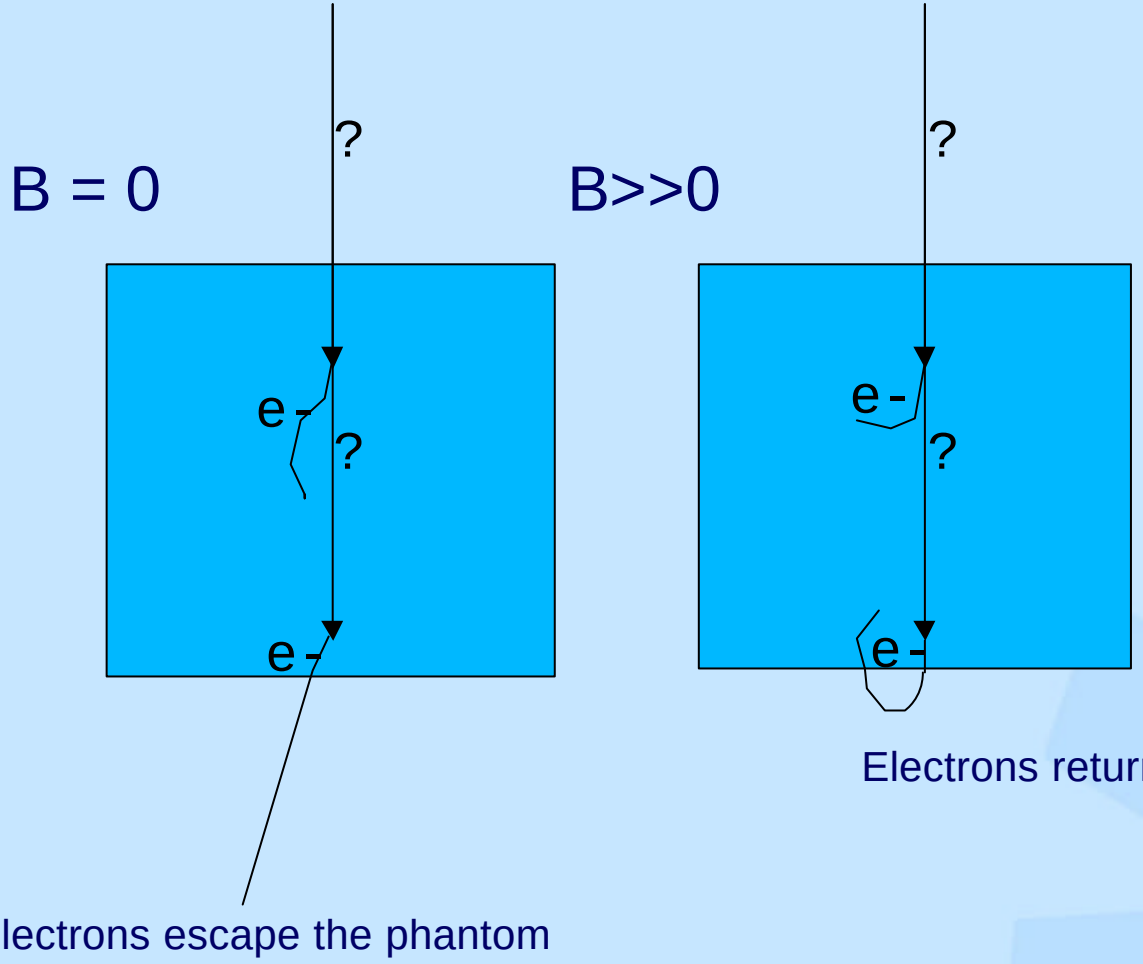

Curvature at B= 1.5 T	
E (MeV)	r (mm)
0.5	2.2
1.0	3.4
2.0	5.6
4.0	10.0
6.0	14.5

Dose deposition at tissue-air interfaces

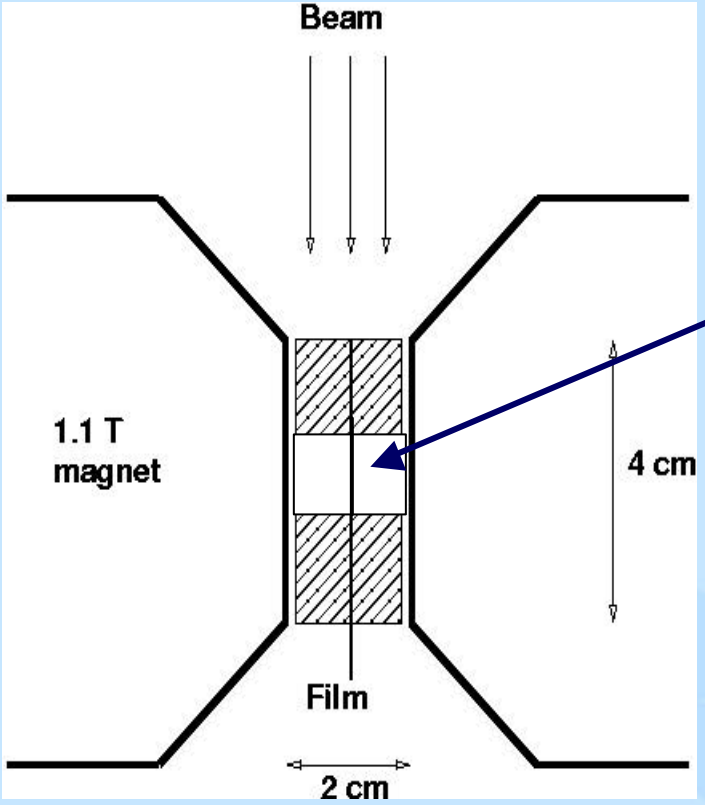

air cavity

Electron Return Effect (ERE)

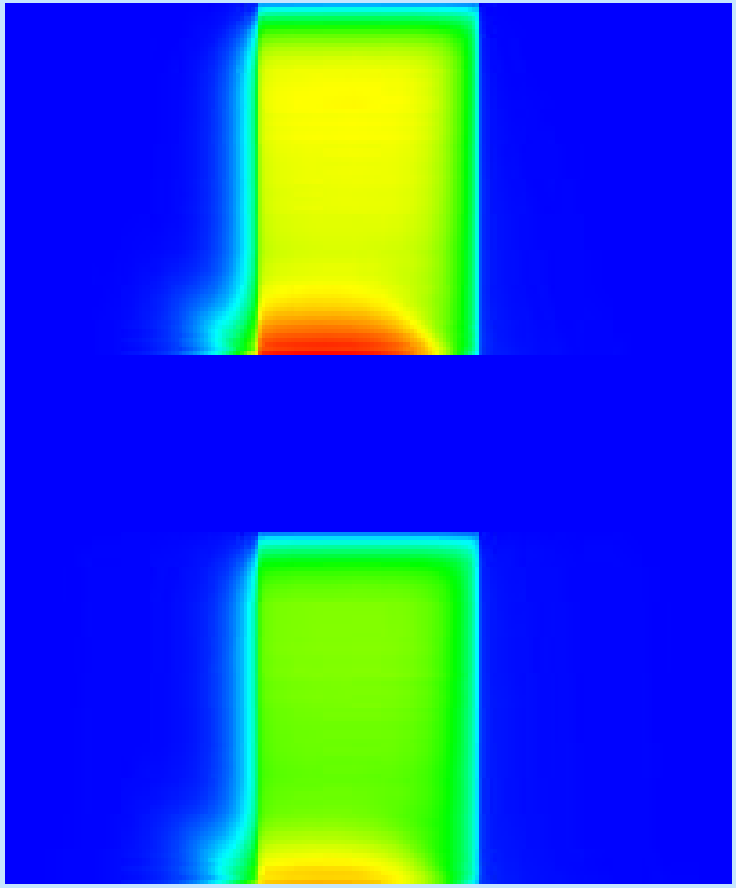

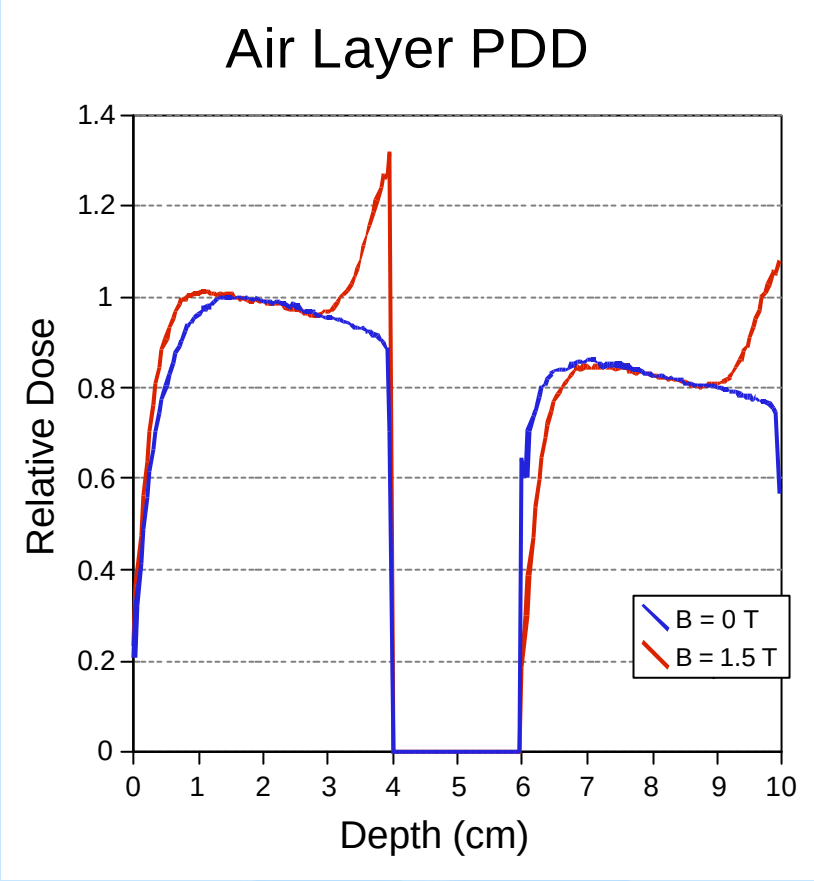

Increased dose deposition at tissue-air interface: Electron Return Effect (ERE)

ERE compensation with opposite beams

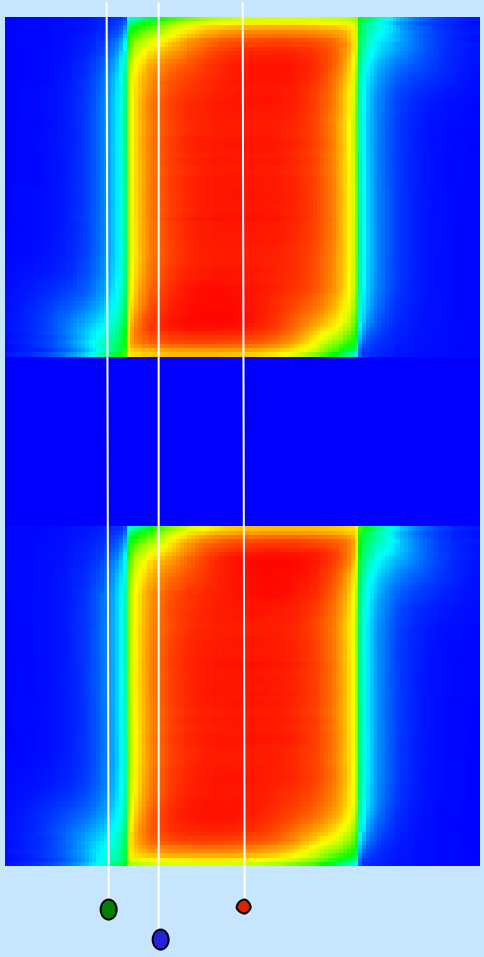

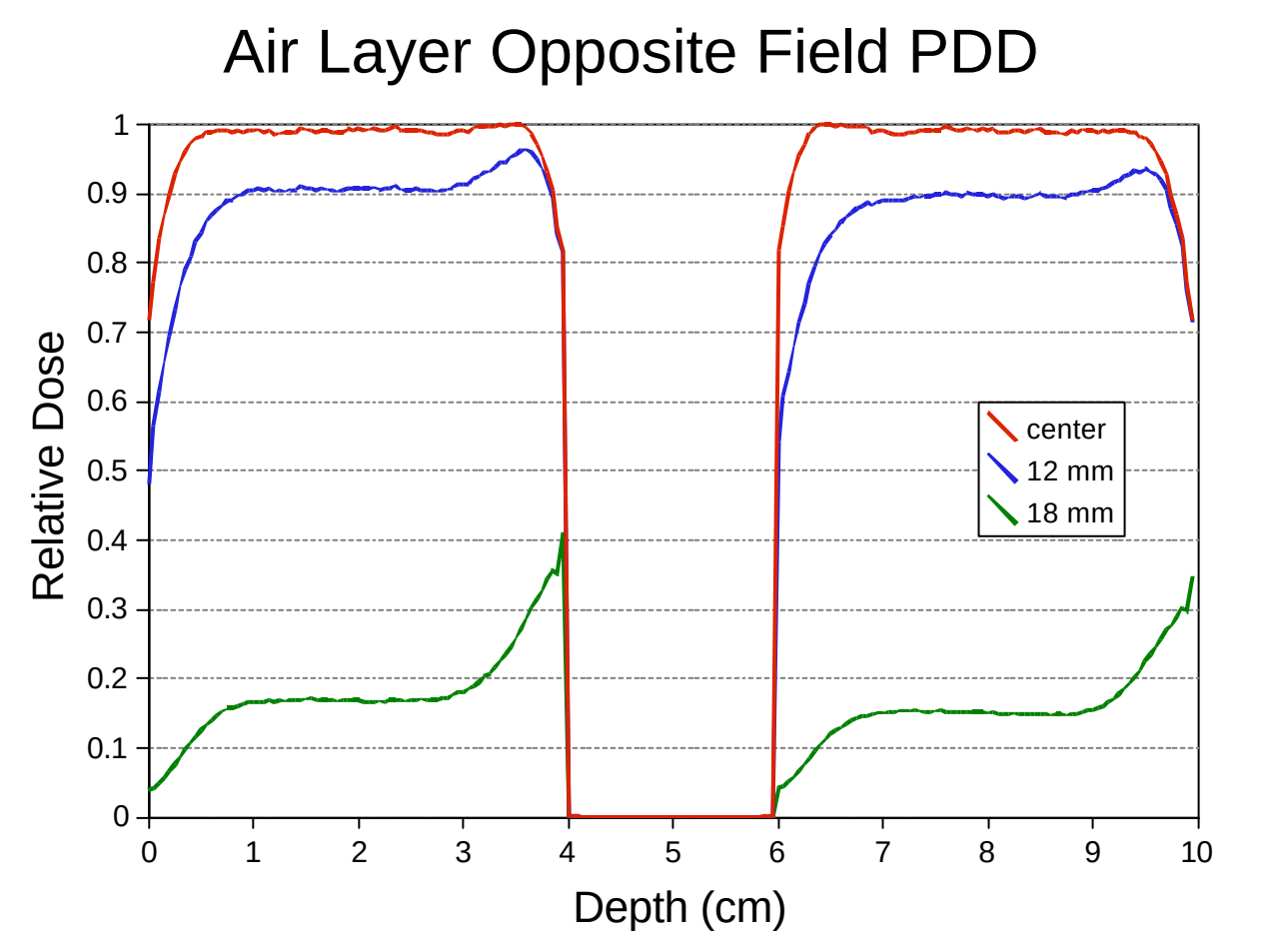

ERE compensation with cylindrical cavity and opposite beams

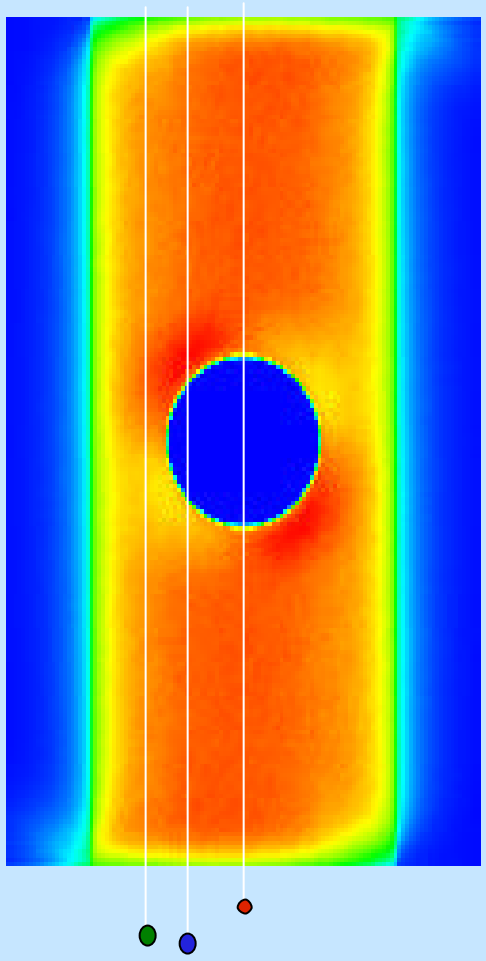

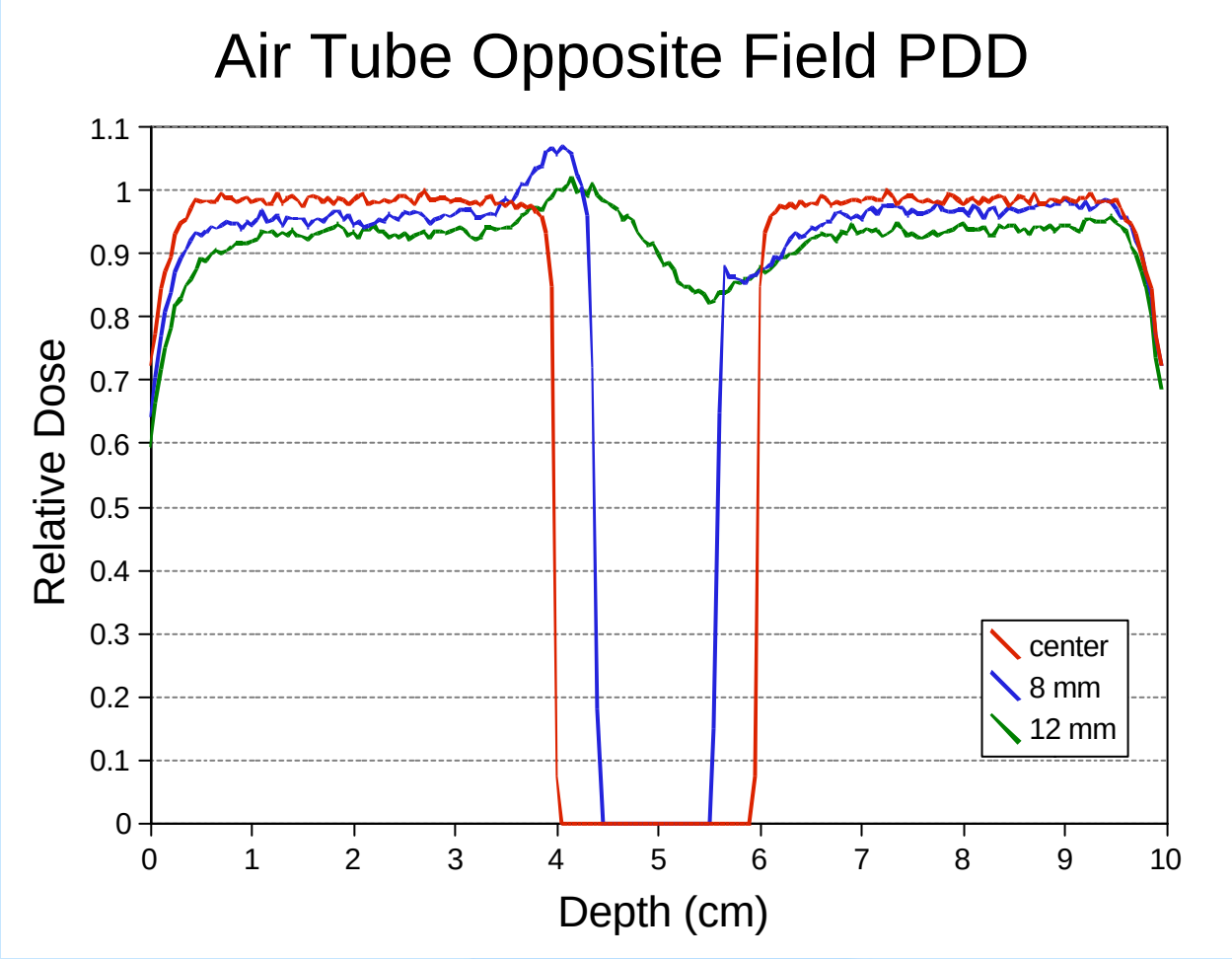

ERE compensation with four beams

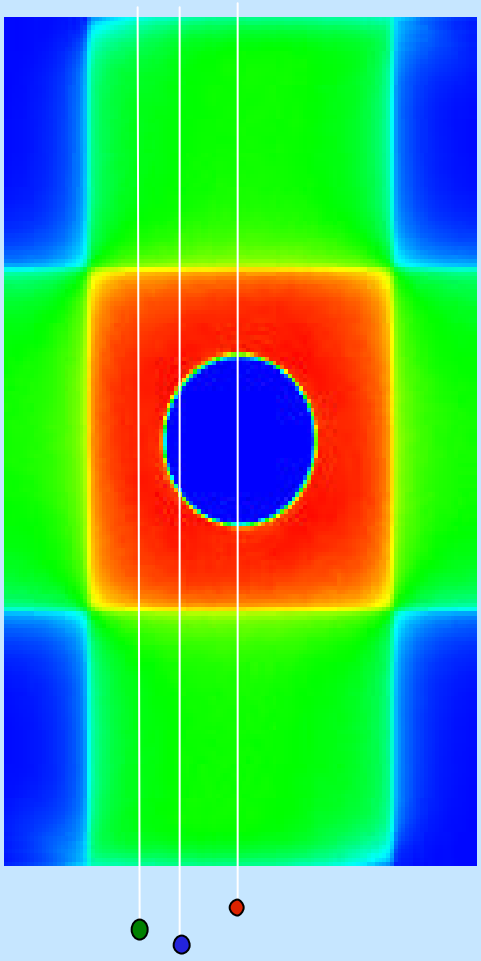

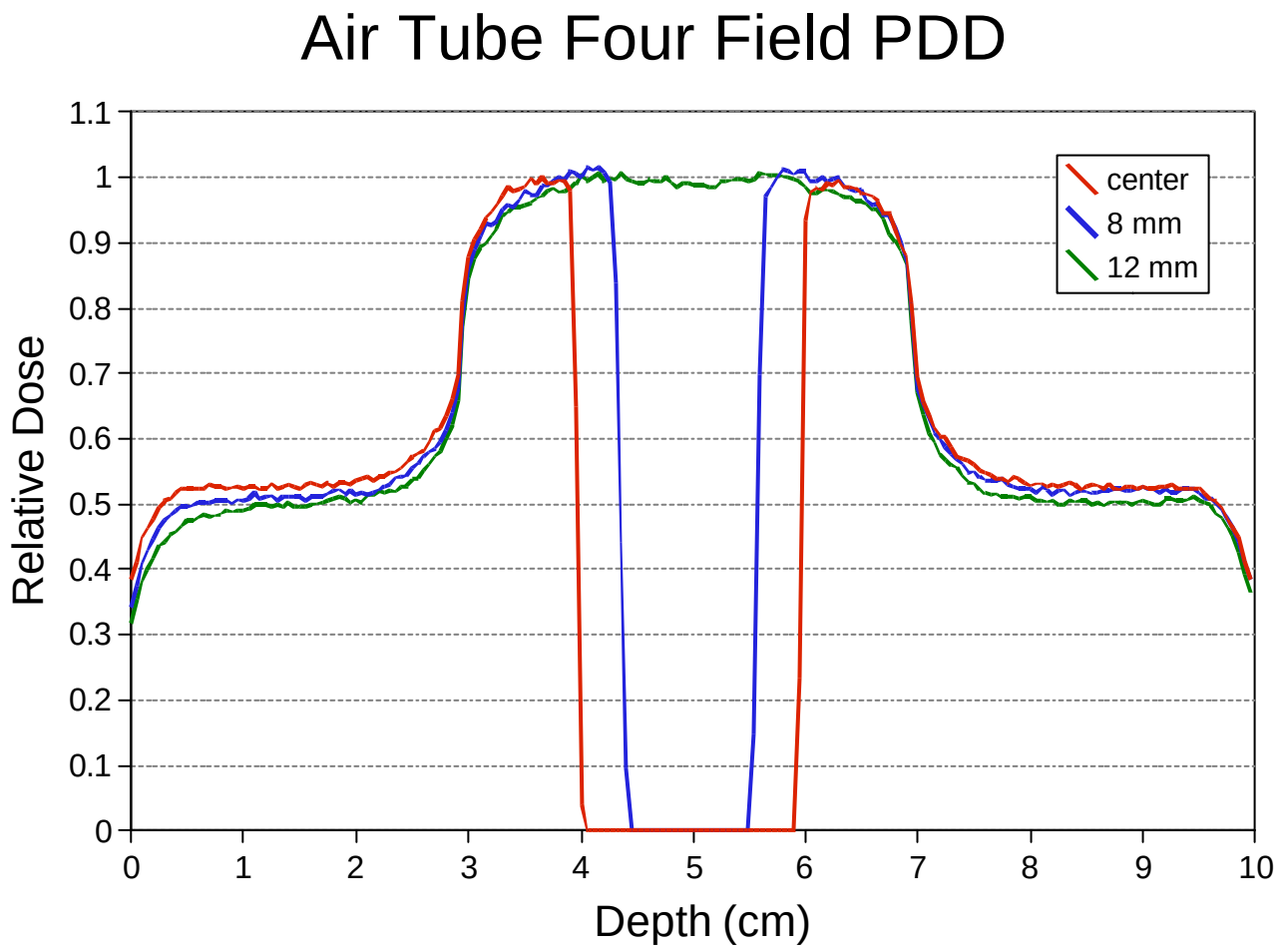

First Geant4 dose depositions at tissue-air interfaces in CT based anatomy

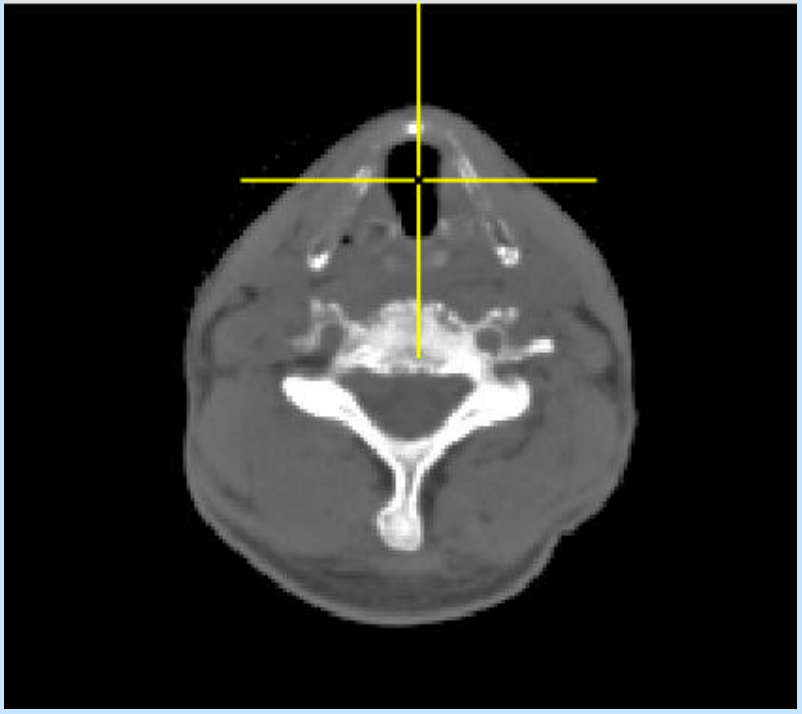

tumour of the larynx, opposite fields 3x3 cm

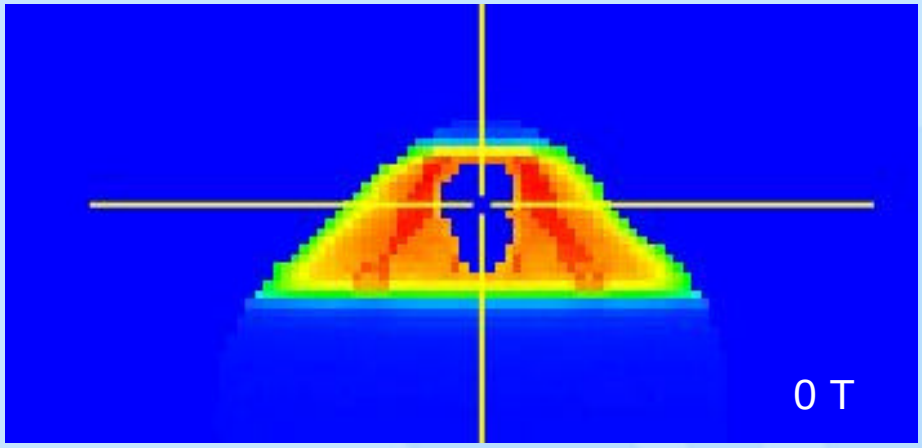

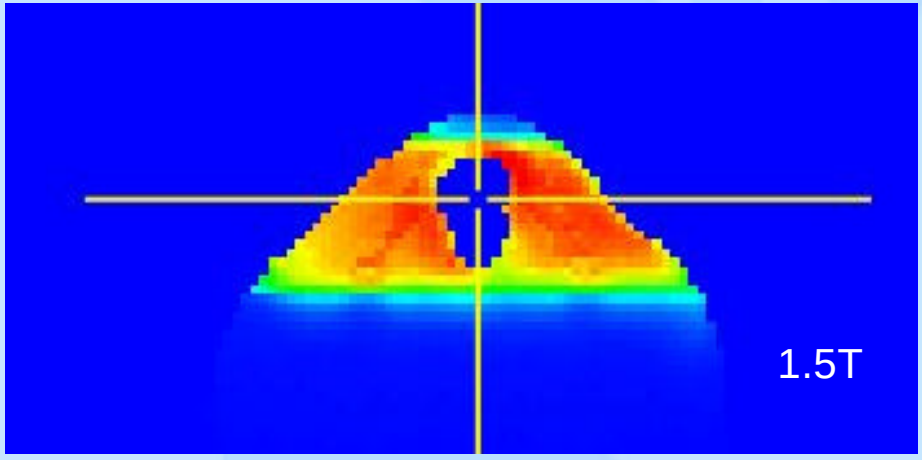

Dose deposition at tissue-air interfaces

- ERE creates dose heterogeneity around air cavities in case of a single beam
- Dose distribution is anatomy specific
  - air cavities
  - orientation with respect to B field
- Effect can be countered by:
  - multiple beams
  - IMRT
  - can be used as a feature in multiple small field irradiation of laryngeal tumours

General conclusions MRIgRT

- (on line) Imaging superb
- no significant technological problems
- some scatter (must be optimised further)
- New effects like the Electron return effect (ERE) must be dealt with

MRIgRT problems presently being investigated at the UMC Utrecht

- Absolute dosimetry
- Geometrical accuracy MRI
- Calibration of absolute positioning (MRI versus accelerator)
- RF interference
- Coil design
- On line image registration
- On line treatment planning

Related:

- treatment response assessment
  - functional imaging (MRS, perfusion, hypoxia)
  - tumour regression

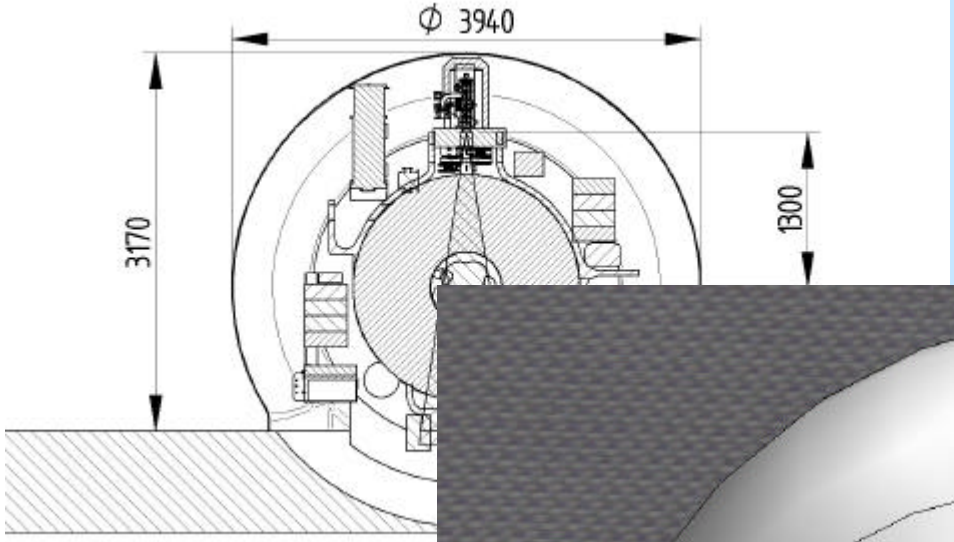

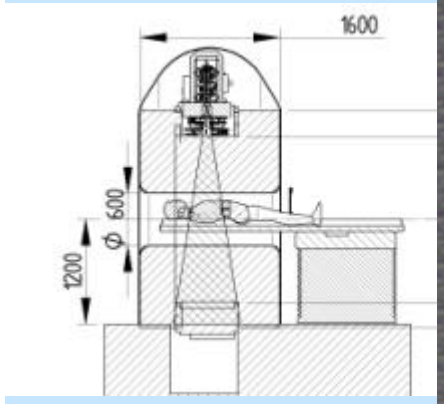

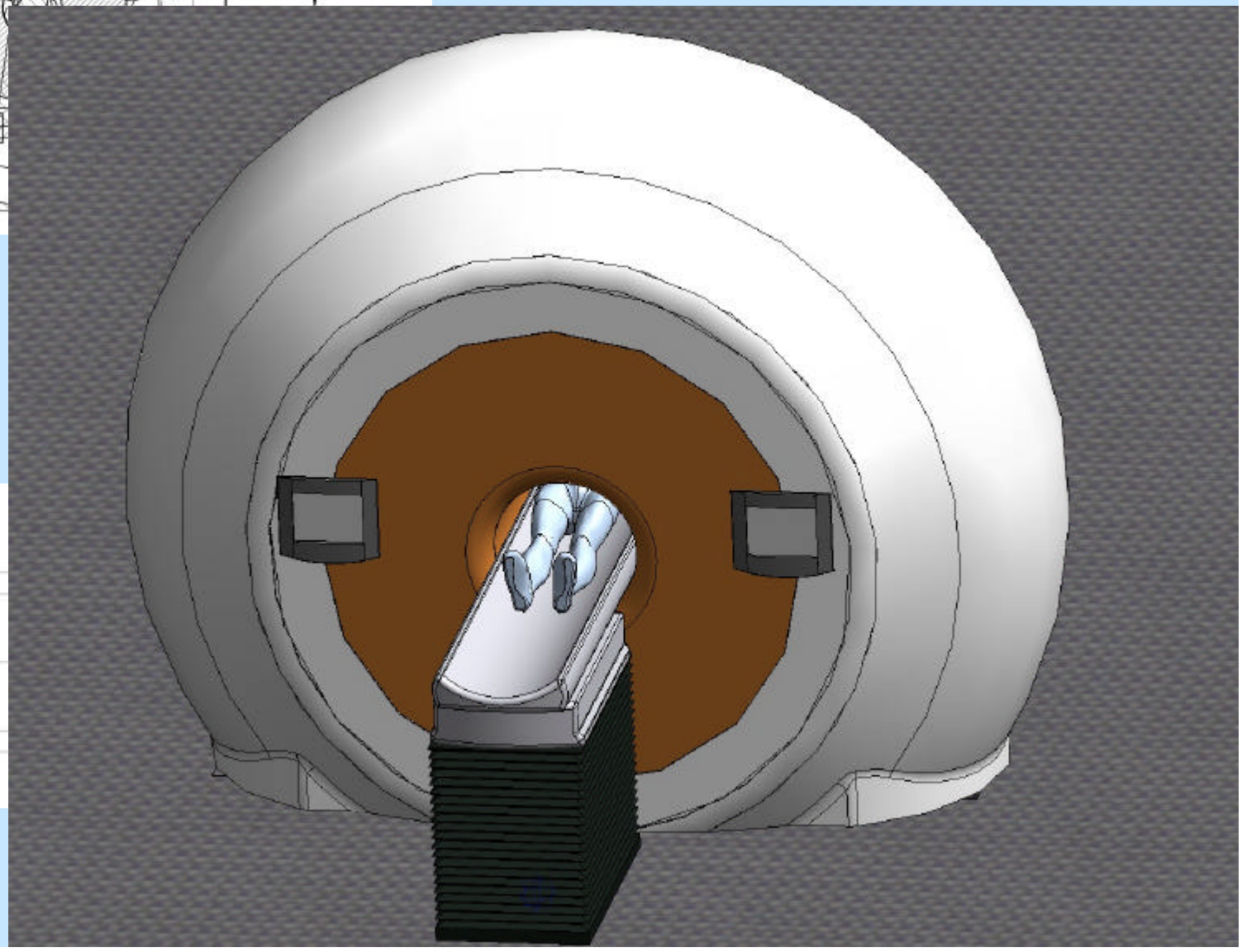

UMC Utrecht