Implant Design and Execution

Robert D. Zwicker
Department of Radiation Medicine
University of Kentucky

Interstitial Implant Techniques

- Radium needles
- Afterloaded angiocaths
- Needle/catheter lead insertion
- Blind end catheters

Needle/catheter lead insertion

- Hollow needle pushed into tissue
- Solid catheter lead threaded into needle
- Needle/catheter lead pulled through
- Catheter pulled through to button end

Needle/catheter lead/catheter insertion

From D.L. Neblett, Brachytherapy Physics, J. Williamson et al, editors, Med. Phys. Publishing Co., Madison WI, 1995

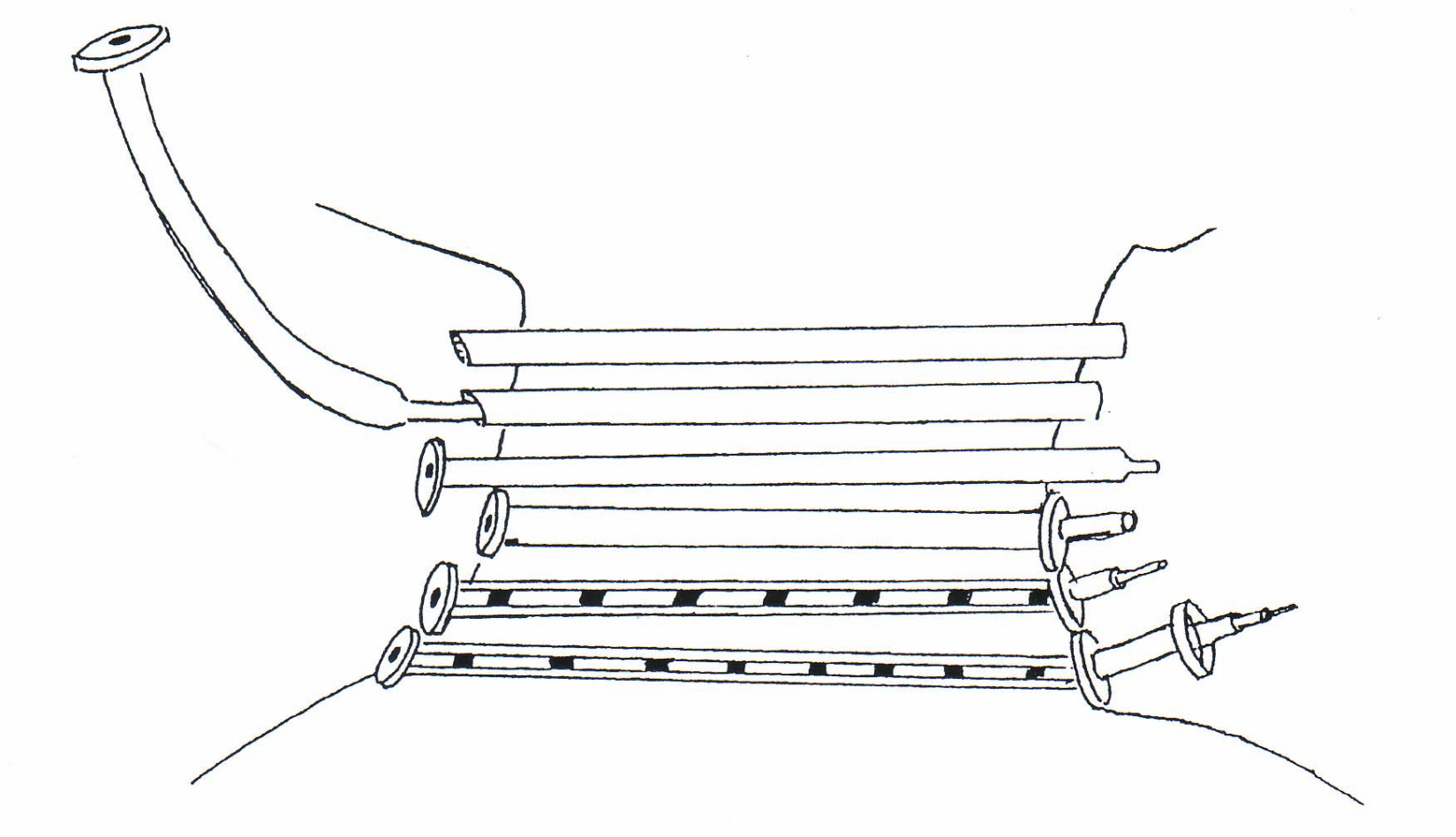

Catheter Positioning

- Closed catheter end secured with button
- Open catheter end secured with friction button or clamp
- Spacers may be used at either end to allow source near skin

Open and blind end catheters, spacers and buttons for interstitial implants

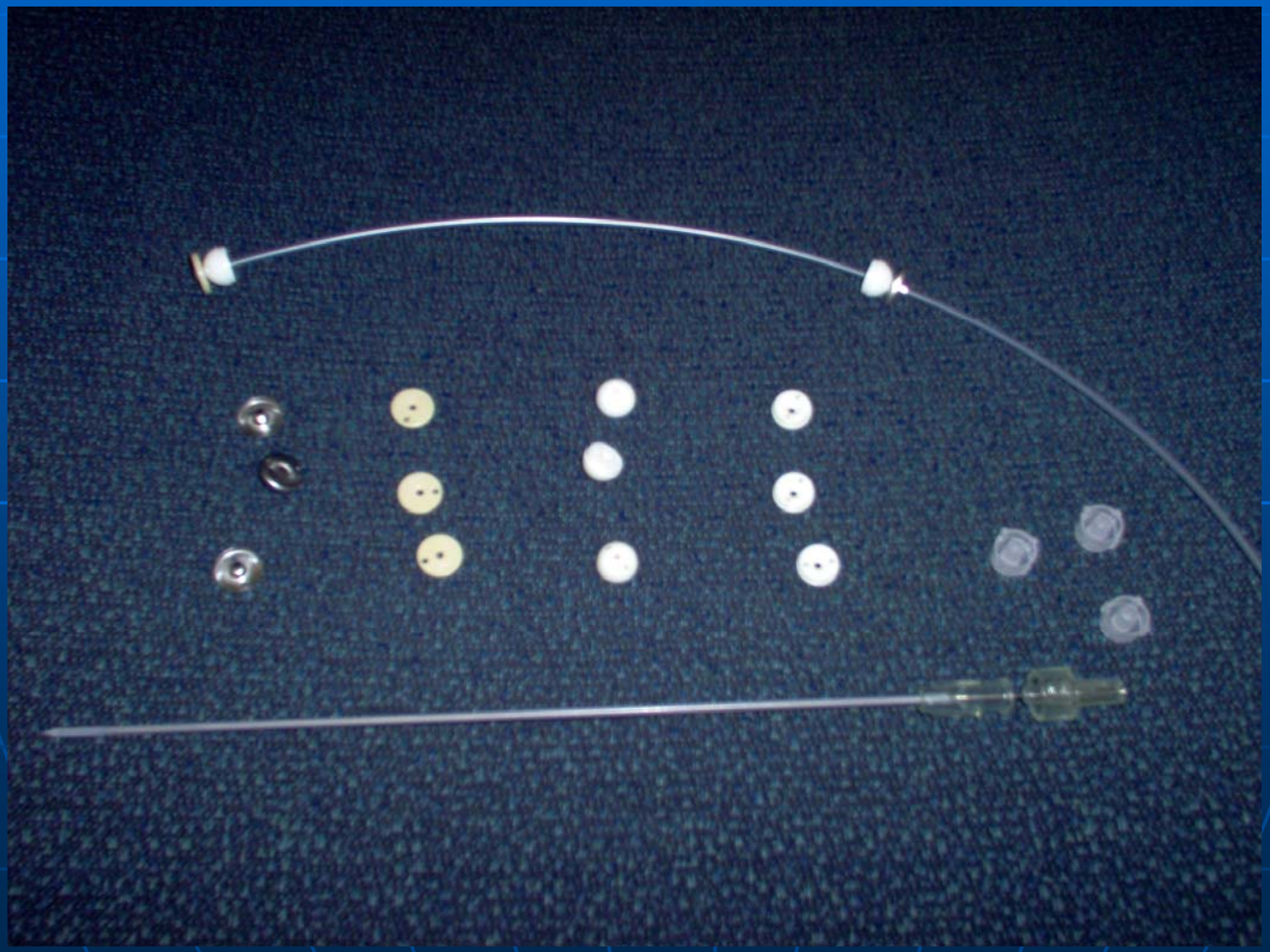

Treatment Planning

- Catheters filled with marked dummy seeds
- Orthogonal or stereo films, CT or other images taken
- Gantry positioned to optimize film quality

Blind End Catheters

- Used for brain, gynecological, and other implants
- Catheters with sharp end and internal stylette inserted into tissue
- Template, CT stereotactic, or other guidance used

Templates

- Used to guide positioning of needles or catheters
- Custom or generic used
- Gives improved catheter/source position relative to freehand
- Possible issues with patient comfort

Syed-Neblett applicator with blind end catheters

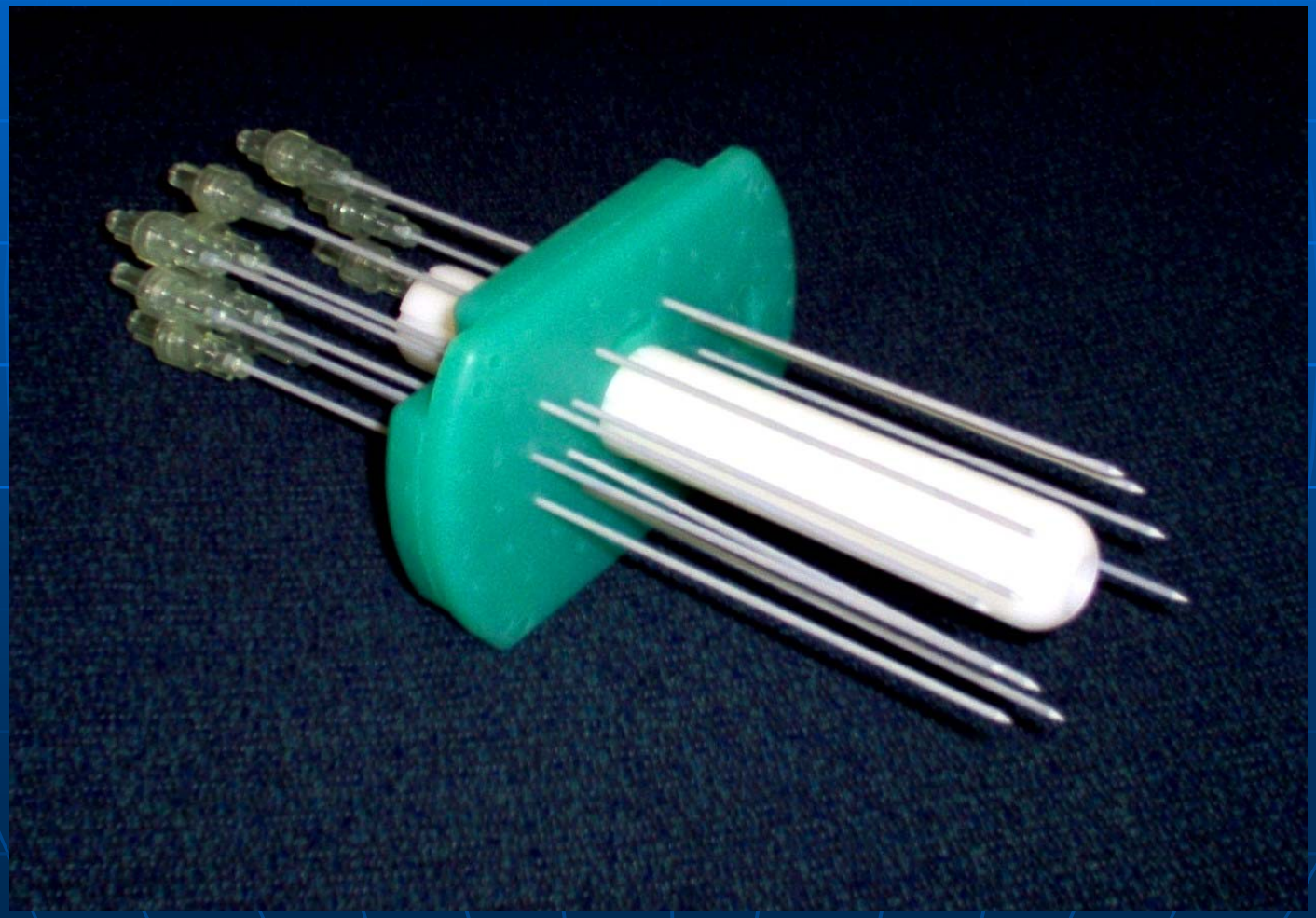

Dose homogeneity

- Source placement guidelines seek to improve conformal coverage and dose uniformity
- Dose uniformity should be monitored for planning and evaluation purposes
- Various criteria for dose homogeneity:

(a)(Vol at 100-150% Rx)/(Vol inside Rx isodose)

(b) (Rx dose)/(Mean Central Dose)

RTOG dose homogeneity criterion: Rx dose/Mean Central Dose

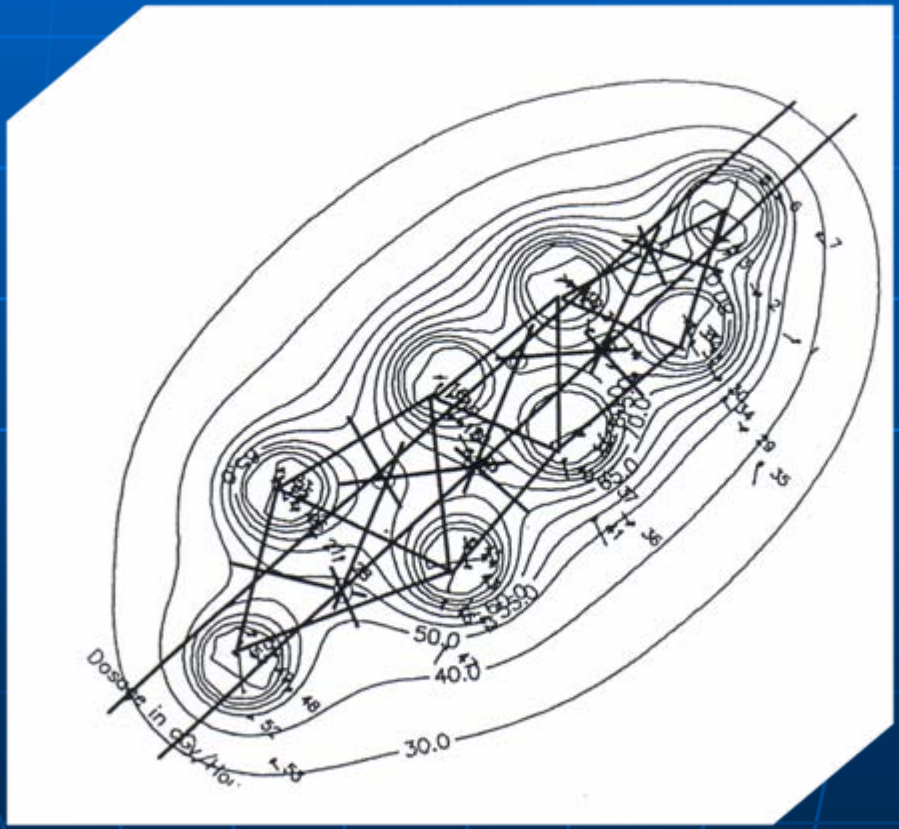

Source Placement

- Most systems give guidelines for source placement
- Interstrand distance typically 1.0 to 1.5 cm
- For biplanar LDR implants of target thickness T, interplanar separation s is:

  (a) in most systems, s=1.5 cm (T=2.5 cm)

  (b) in Tufts system, tables of s given
- For biplanar HDR implants, s = T/1.414

Conclusions

- Target coverage and dose uniformity are goals of interstitial brachytherapy
- Source placement guidelines aid these goals
- Brachytherapy systems help in implant design
- Accurate source placement needed to carry out implant design

Message

- Neither LDR differential loading nor HDR dwell time optimization can salvage an implant with poor source guide positioning
- Careful pre-implant planning and accurate catheter placement are essential to achieving the goals of interstitial brachytherapy (conformal coverage, dose uniformity)