Quimby-based Brachytherapy Systems

Robert D. Zwicker
Radiation Medicine Department
University of Kentucky

Classical Brachytherapy Systems

- Quimby (1932): uniform Ra-226 activity distribution
- Paterson-Parker (1934): heavy peripheral loading of Ra-226
- Paris (1978): uniform Ir-192 wire loading

Quimby System (E. Quimby, 1932)

- Equally spaced Ra-226 needles
- Planar or Volume distributions
- Tables of exposure rates along a central line perpendicular to implant plane
- Tables of exposure rates at periphery of volume implant
- Concepts applied to Ir-192 implants

Quimby System: planar dose distribution

- For points equidistant from implant plane, dose rate is higher near the center
- Isodose curves bulge outward near the center of the plane

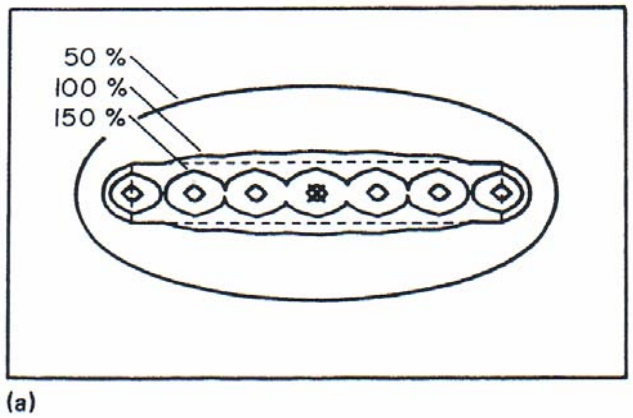

(a)

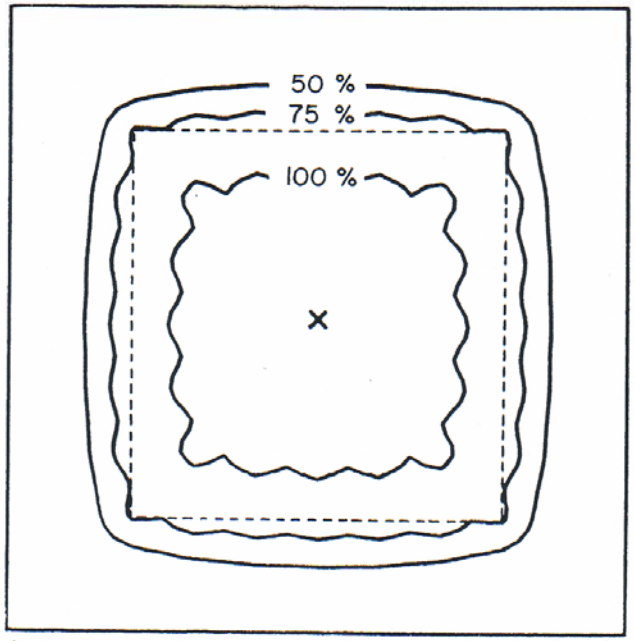

(b)

Quimby-type planar implant

From C. Saw and N, Suntharalingam, Med. Phys 15: 391, 1988

Quimby System: biplanar implants

- Quimby mainly concerned with surface applicators
- No effective guidance for multiple plane implants
- Two plane implants hotter near center, cooler at edges
- Central minimum dose typically 25-30% hotter than prescription dose

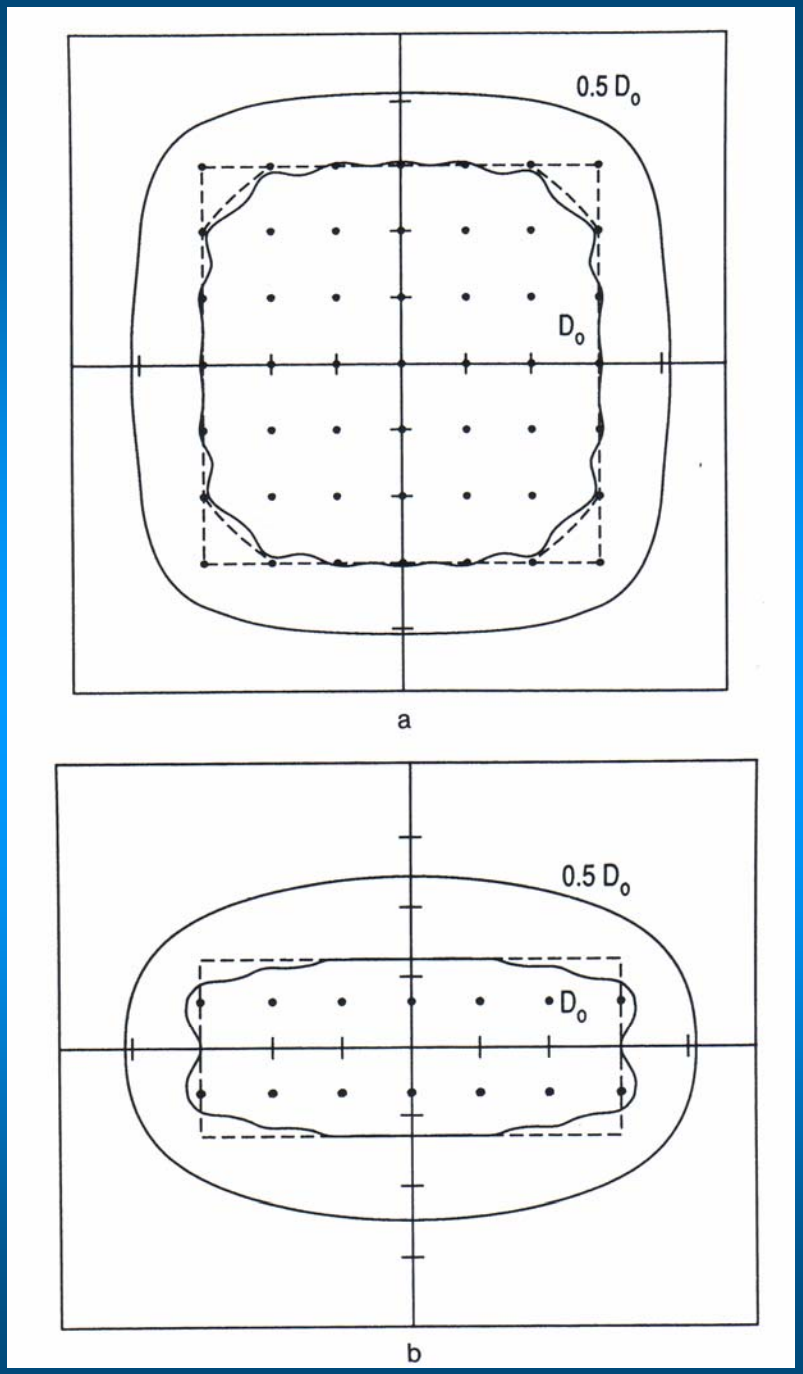

Two-plane Ir-192 Quimby implant: (a) central plane between sources (b) central plane bisecting sources

From R. Zwicker and R. Schmidt-Ullrich, IJROBP 31: 149, 1994

Quimby System: Volume Implants

- Uniform sources 1 to 2 cm apart throughout implant volume
- Tables of source strengths published for minimum of 1000 cGy at volume periphery

Quimby based systems using Ir-192 seeds in ribbon

- Kwan System (Kwan et al.)
- Memorial System (Anderson et al.)
- Tufts System (Zwicker et al.)
- Saw System (Saw et al.)

Kwan System (Kwan et al., 1983)

- Two plane implants, uniform distribution of Ir-192 seed activities
- Examined ratio of peripheral (A) to central (B) dose
- Studied positioning of sources inside volume
- Studied interstrand and interplanar spacing (1.0 and 1.5 cm)

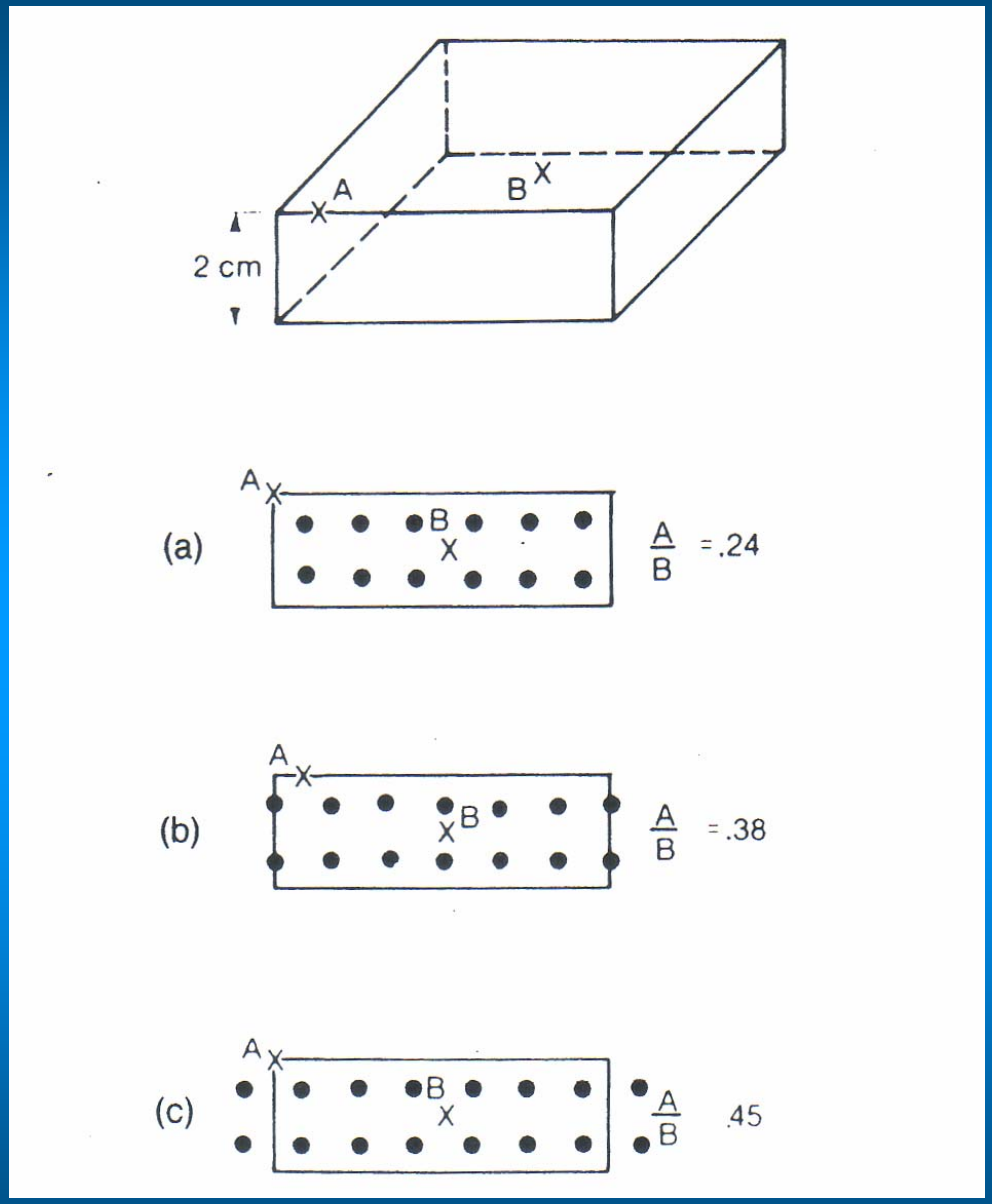

Kwan system: source and calculation point positions

From Kwan et al, Med. Phys. 10, 456, 1983

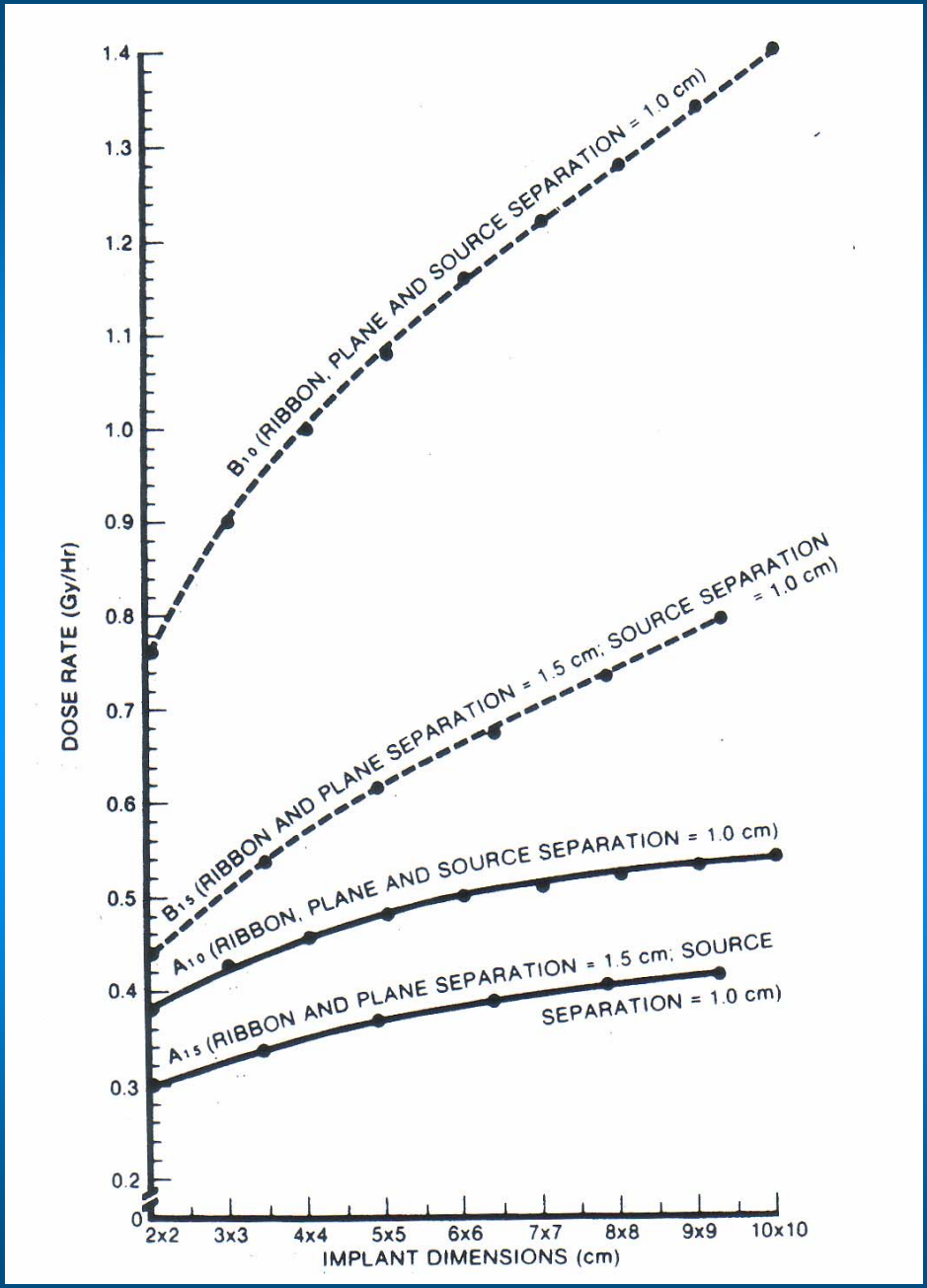

Kwan System: interstrand and interplanar spacings

From Kwan et al, Med. Phys. 10, 456, 1983

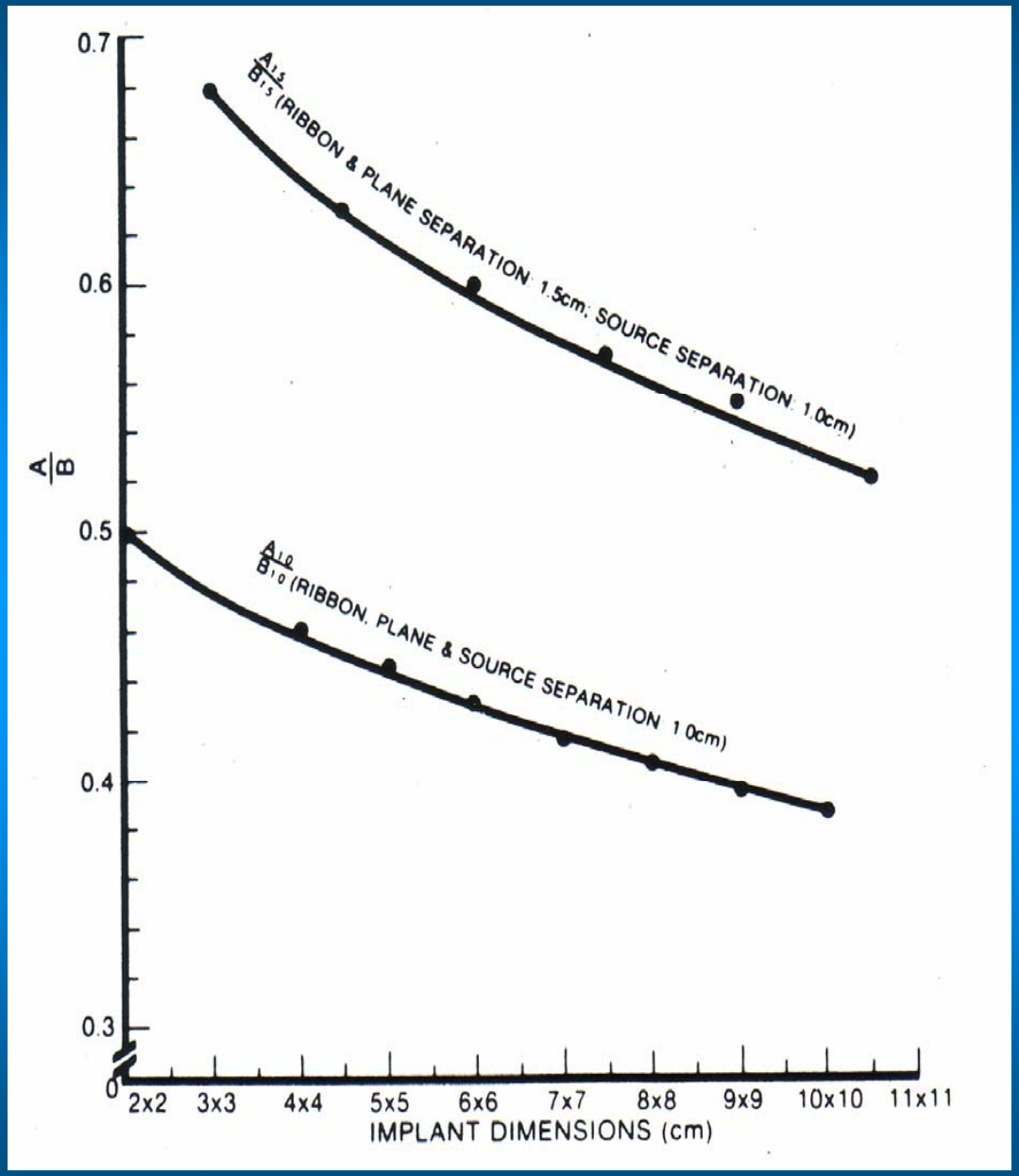

Kwan System: dose uniformity

From Kwan et al, Med. Phys. 10, 456, 1983

Kwan System: Conclusions

- Extend sources to lateral boundaries of target volume
- Use 1.5 cm interstrand and interplanar spacing
- Dose rate curves given for 2.0 cm target thickness (x 0.87 for 2.5 cm)
- Equivalent square used for rectangular implants

Memorial System (Anderson et al)

- Devised for use with in-house stocks of Ir-192
- Biplanar implants, reference point near corner
- Interplanar separation 1.5 cm, target thickness 2.5 cm
- one fewer strand in superficial plane
- Nomograph gives number of strands for 10 Gy/day
- Similar I-125 nomograph widely used for prostate implants

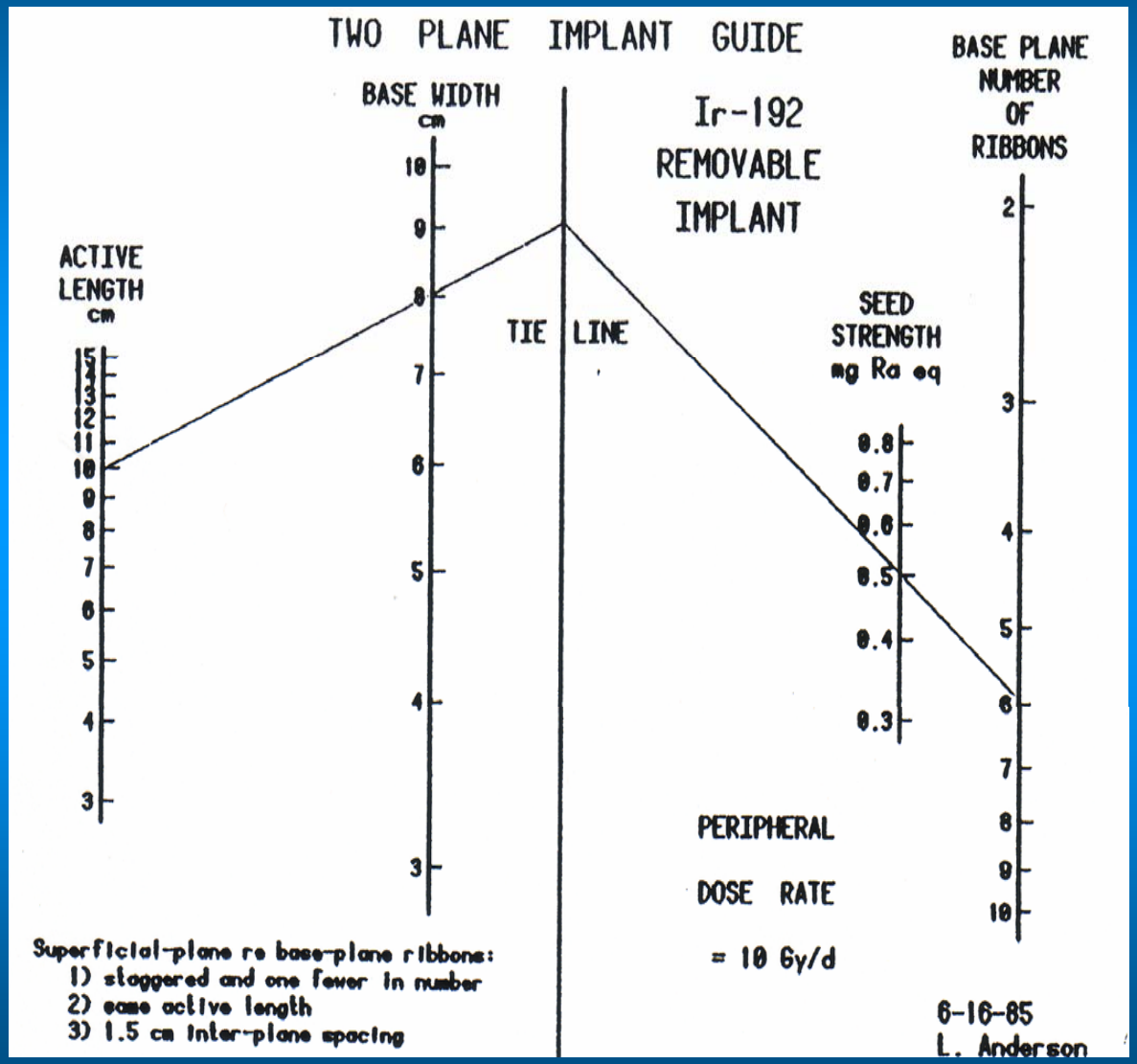

Memorial System: Ir-192 nomograph

from L. Anderson and A. Osian, Endocuriether/Hyp Onc. 2: 5, 1986

Tufts System (Zwicker et al, 1985)

- Considers range of target thicknesses
- Interplanar separation varied with target thickness
- Reference dose extends to target boundaries along symmetry axes
- Tables of plane separation and dose rates given

Tufts System: (a) central plane between source planes; (b) central plane bisecting source ribbons; target volume = WLt

From R. Zwicker et al, IJROBP 11: 2163, 1985

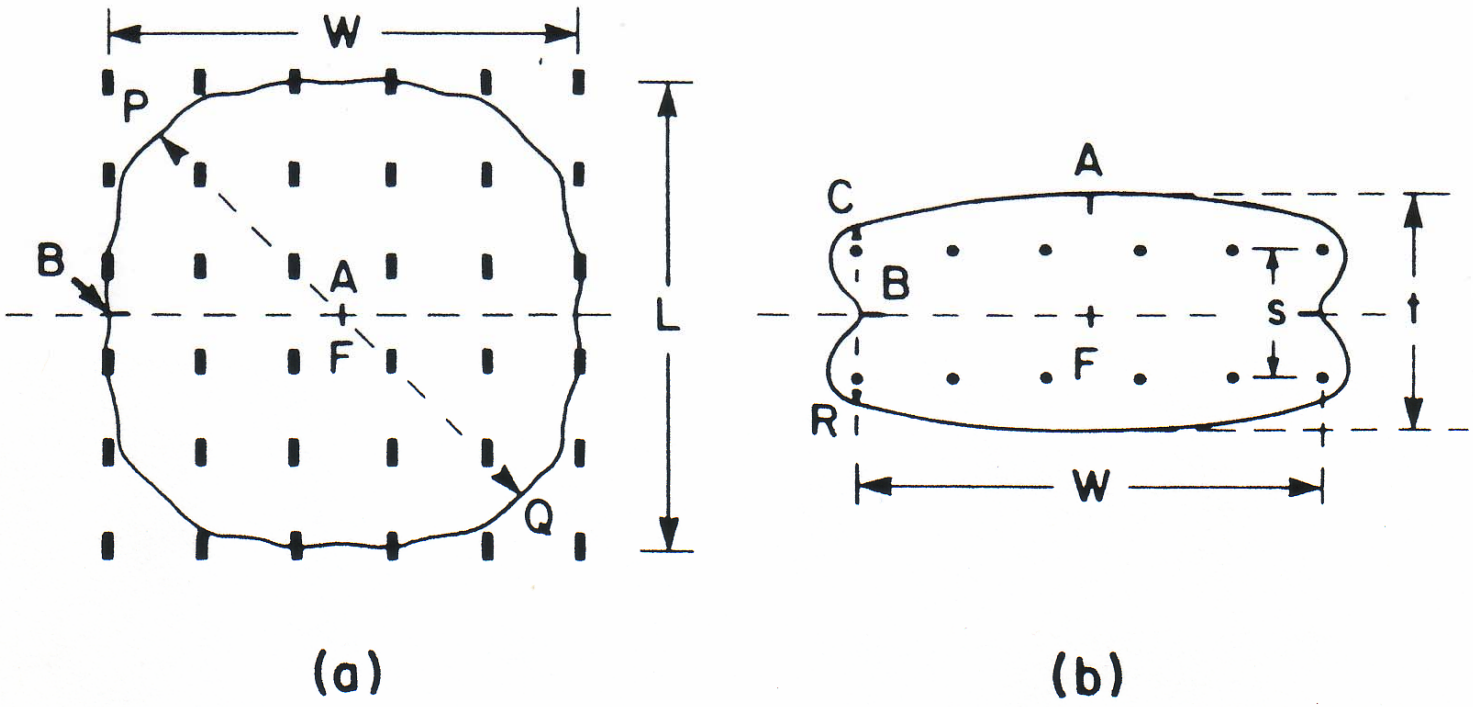

Saw Method (C. Saw et al, 1988)

- Examined choice of reference dose rate for varied implant geometries
- Studied single and two plane implants
- Used coverage (CI), homogeneity (HI), and external volume (EI) indices
- Found maximum in HI for a given (optimal) reference dose rate
- Provided plots of optimal reference dose rate versus implant size

Saw Method: biplanar implant area (a) 3x3 cm; (b) 6x6 cm; (c) 9x9 cm; (d) 12x12 cm

From C. Saw and N. Suntharalingam, Med. Phys. 15: 391, 1988

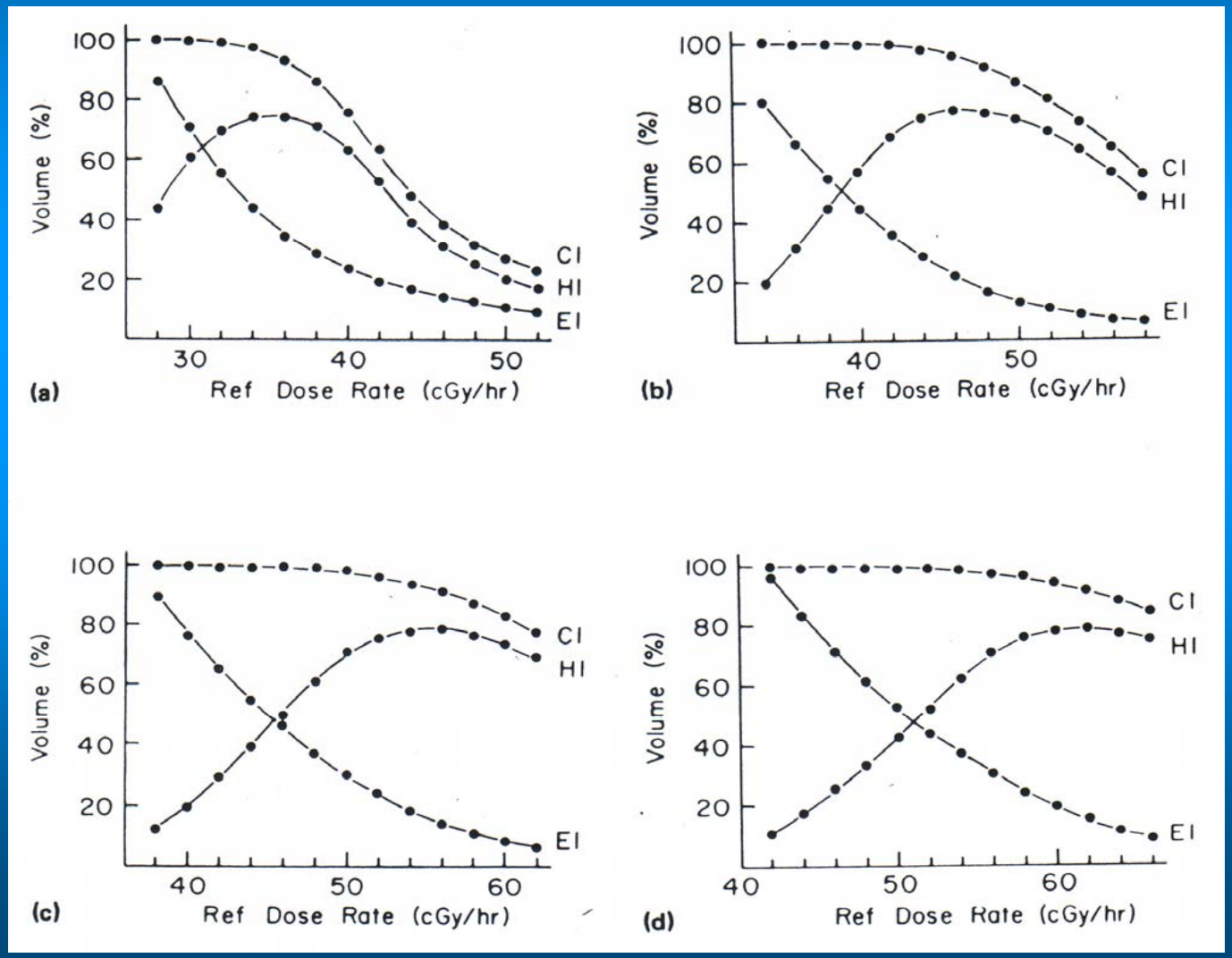

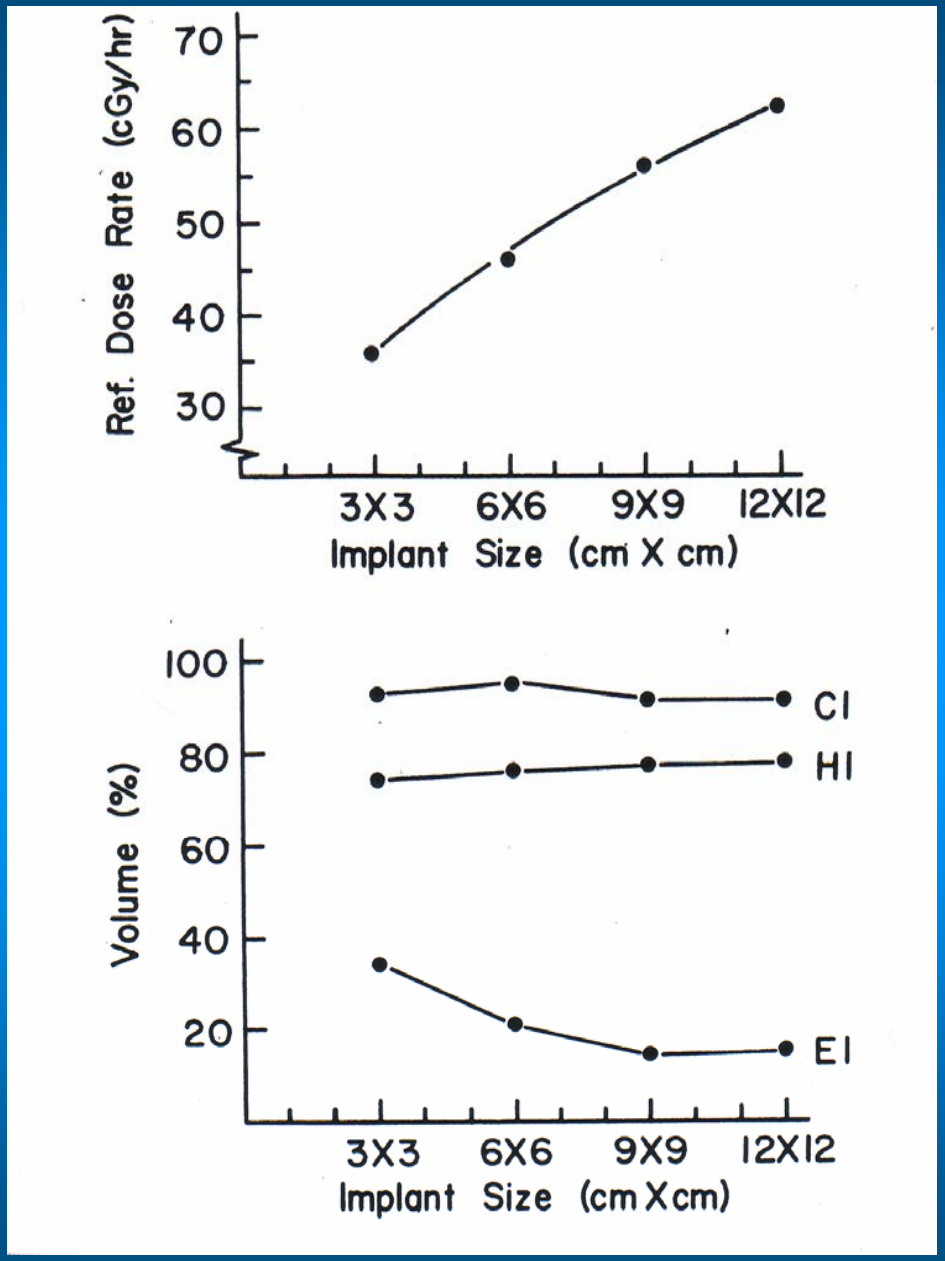

Saw Method: optimized dose rate, CI, HI, and EI

From C. Saw and N. Suntharalingam, Med. Phys. 15: 391, 1988

Conclusions

- Quimby-based implants widely used in LDR brachytherapy
- Need for dose rate/activity tables, plots, nomographs eliminated by availability of computer planning
- Understanding of characteristics of Quimby-based implants is useful in modern treatment planning