Mammography: Dosimetry

ACMP Annual Meeting

Virginia Beach

Saturday, May 2, 2009

Lawrence N. Rothenberg, Ph.D.

Department of Medical Physics

Memorial Sloan-Kettering Cancer Center

New York, NY

rothenbl@mskcc.org

Why Measure Dose?

- Evaluation of Risk to the Patient
  - Benefit - Risk Calculation
- Comparison of Techniques
  - Screen/Film
  - New Image Receptors
- Equipment Performance Evaluation
- Information to Patient
- Regulations and Guidelines

NCRP Report No. 149

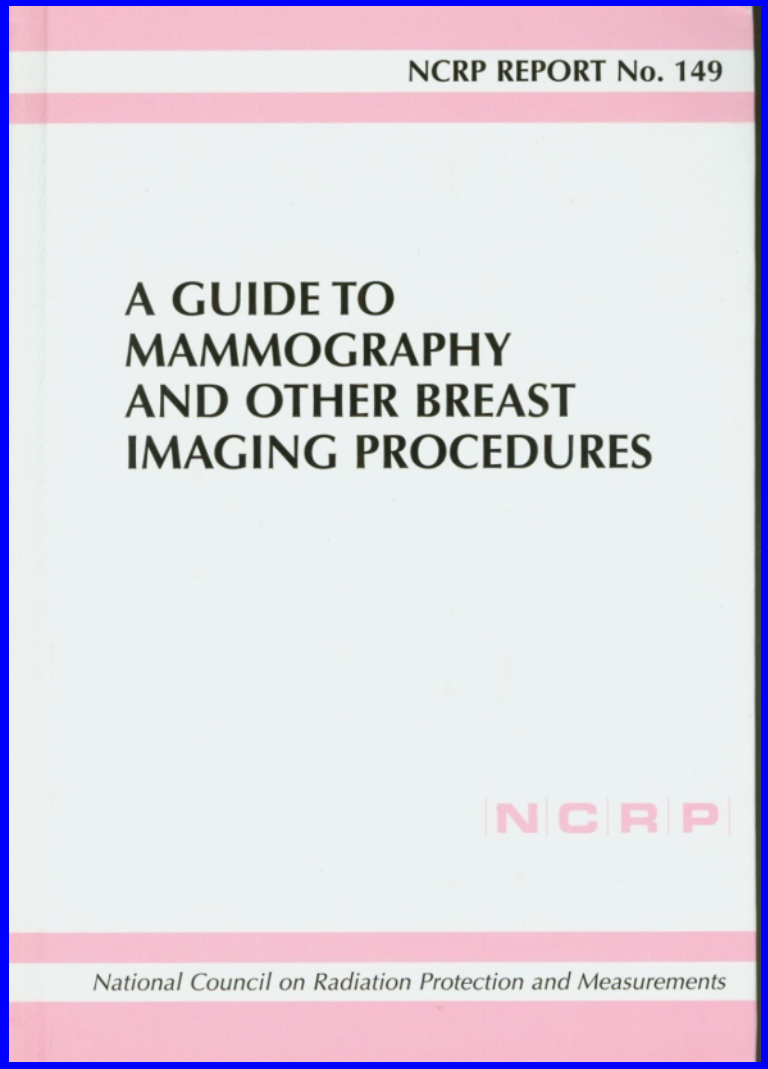

Replaced →

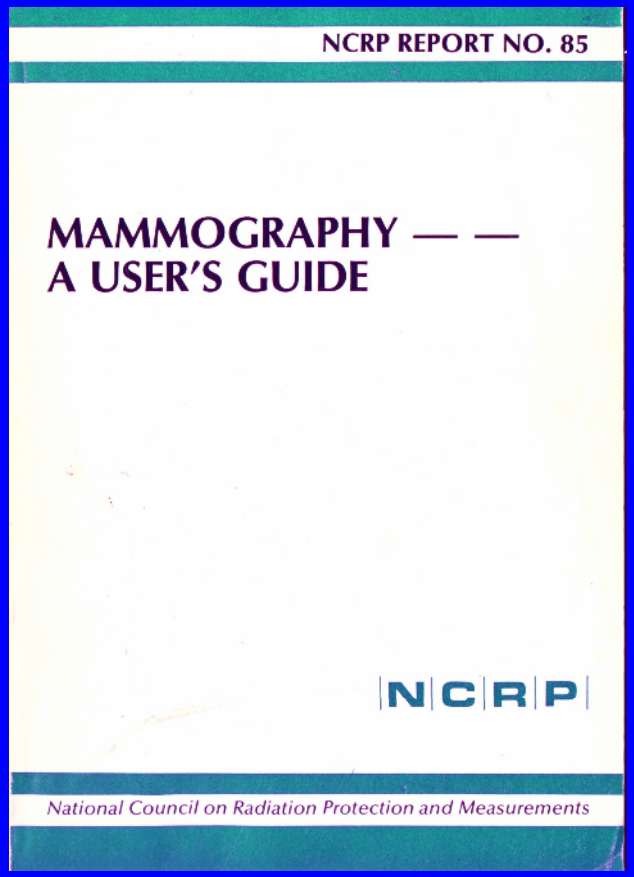

www.ncrponline.org

Other Members NCRP SC-72

Stephen A. Feig, M.D. (R)
Arthur G. Haus (P)
R. Edward Hendrick, Ph.D.(P)
Geoffrey R. Howe, Ph.D.(E)
Wende W. Logan-Young, M.D.(R)
John L. McCrohan, M.S.(P)
Edward A. Sickles,M.D.(R)
Martin Yaffe, Ph.D.(P)
William Beckner (S)
James A. Spahn(S)

E = Epidemiologist, P = Physicist, R = Radiologist, S = NCRP Staff

What to Measure?

What to Report?

Dose Parameters

- In-air Surface Exposure, X_a
- Surface Dose, D_s
- Midline Dose, D_{mid}
- Mean Glandular Dose, $(D_g)_{av}$

In-air Surface Exposure

- Easy to measure
- Useful for quick comparisons
- Non-additive
- Not representative of risk
- Not representative of relative risk - beam quality changes

NCRP 149 Lateral View of Breast

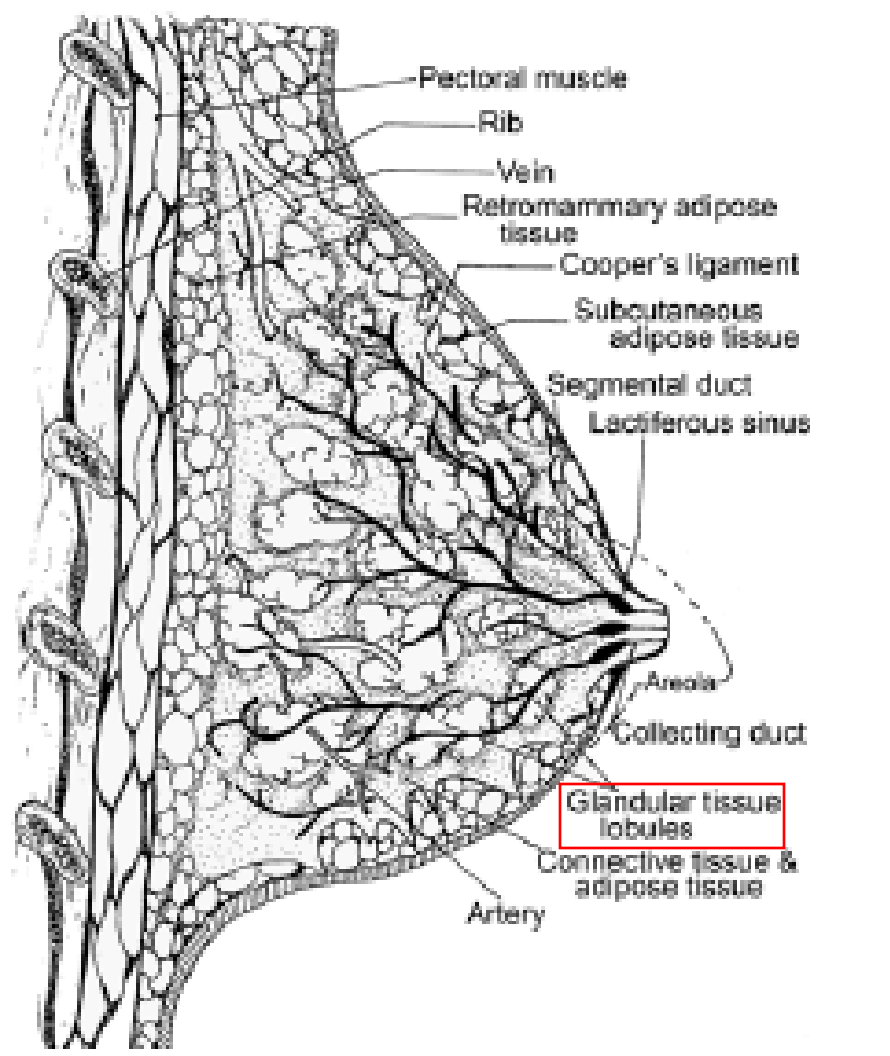

Mean Glandular Dose

- Can not be measured directly
- Most representative of risk
- Calculated from simple measurements and lookup tables

Assumptions: Dose Calculation

- Firm Compression
- Uniform Cross Section
- 0.5 cm Adipose Layer - Top & Bottom
- Adipose / Gland Mix:
  - 100% / 0%
  - 50% / 50% (discussion later about appropriateness of 50/50)
  - 0% / 100%

Compression (NCRP 149)

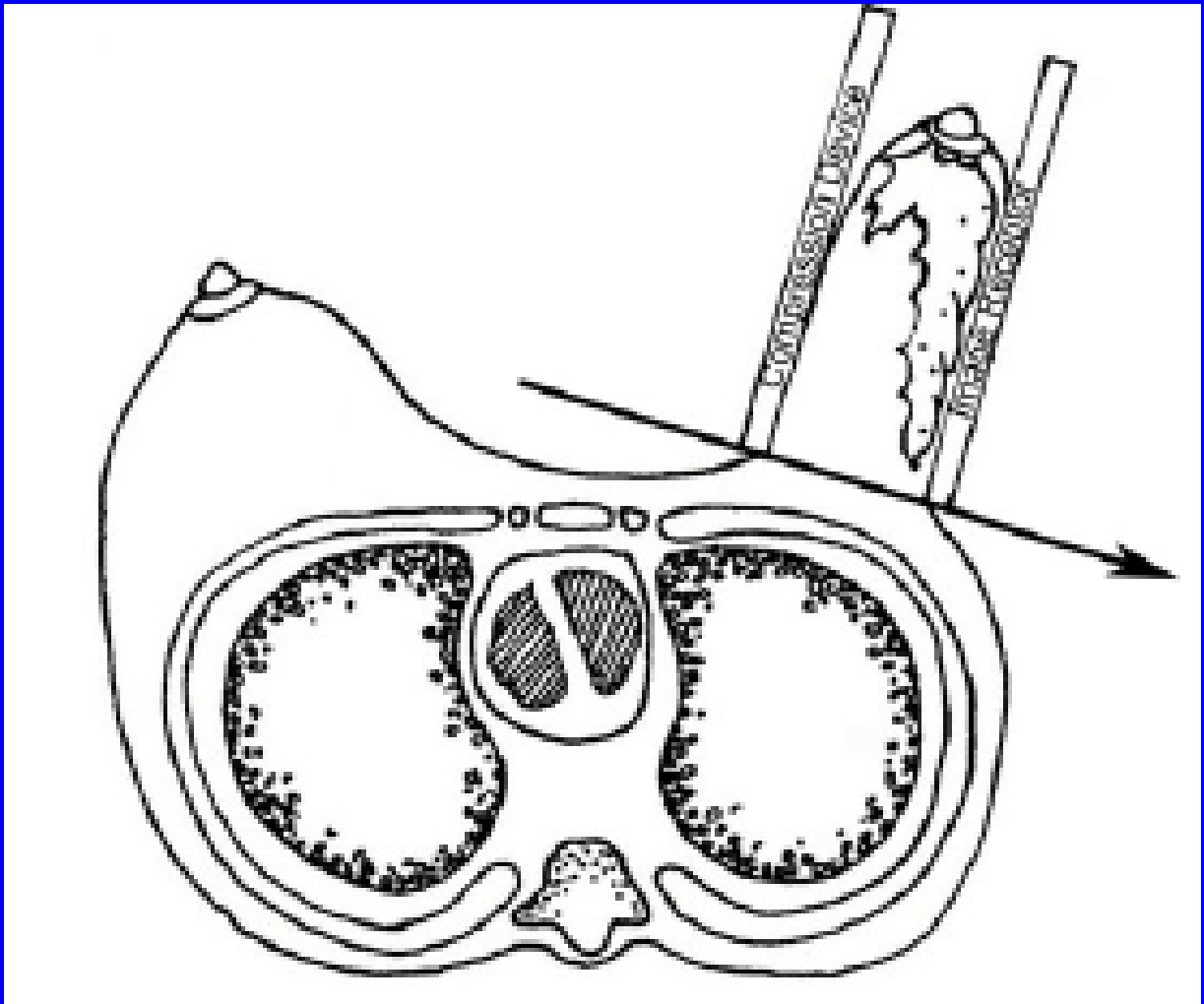

NCRP 149 Compression

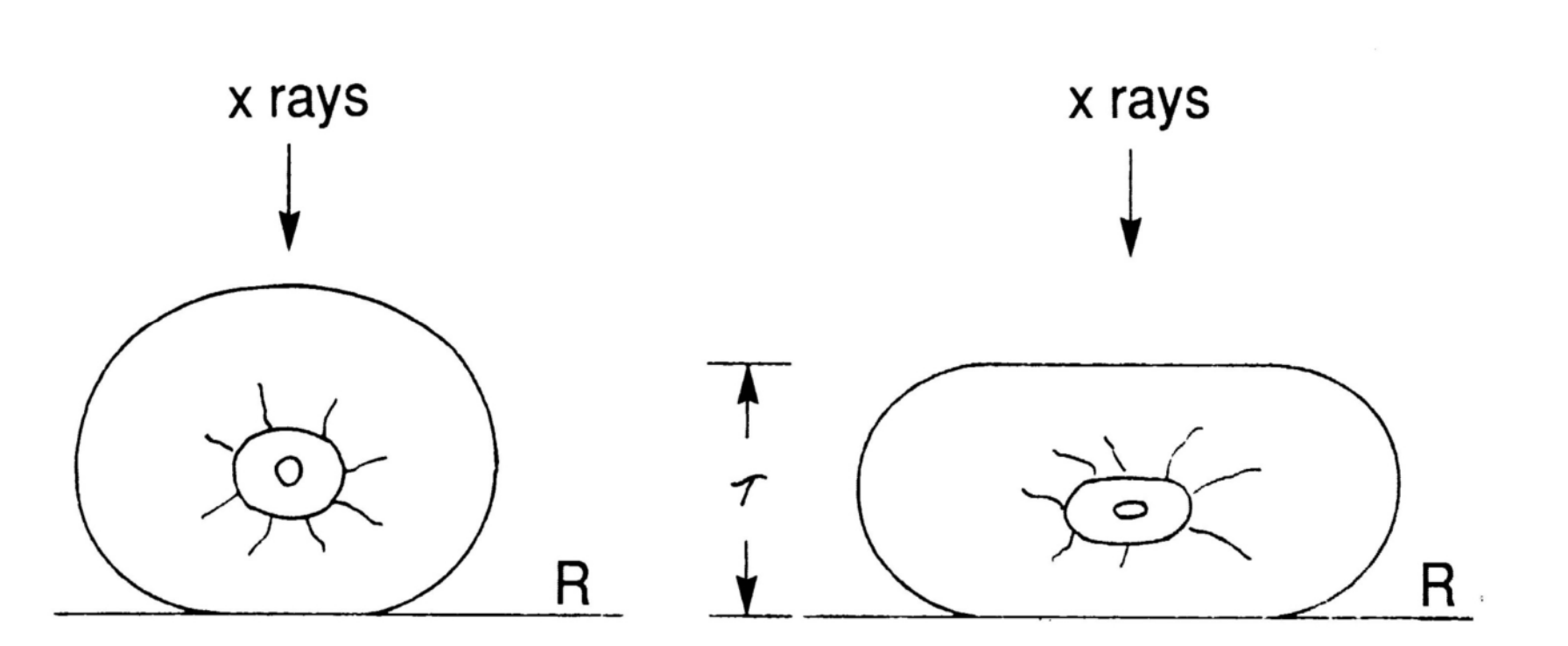

NCRP 149 Dose Model

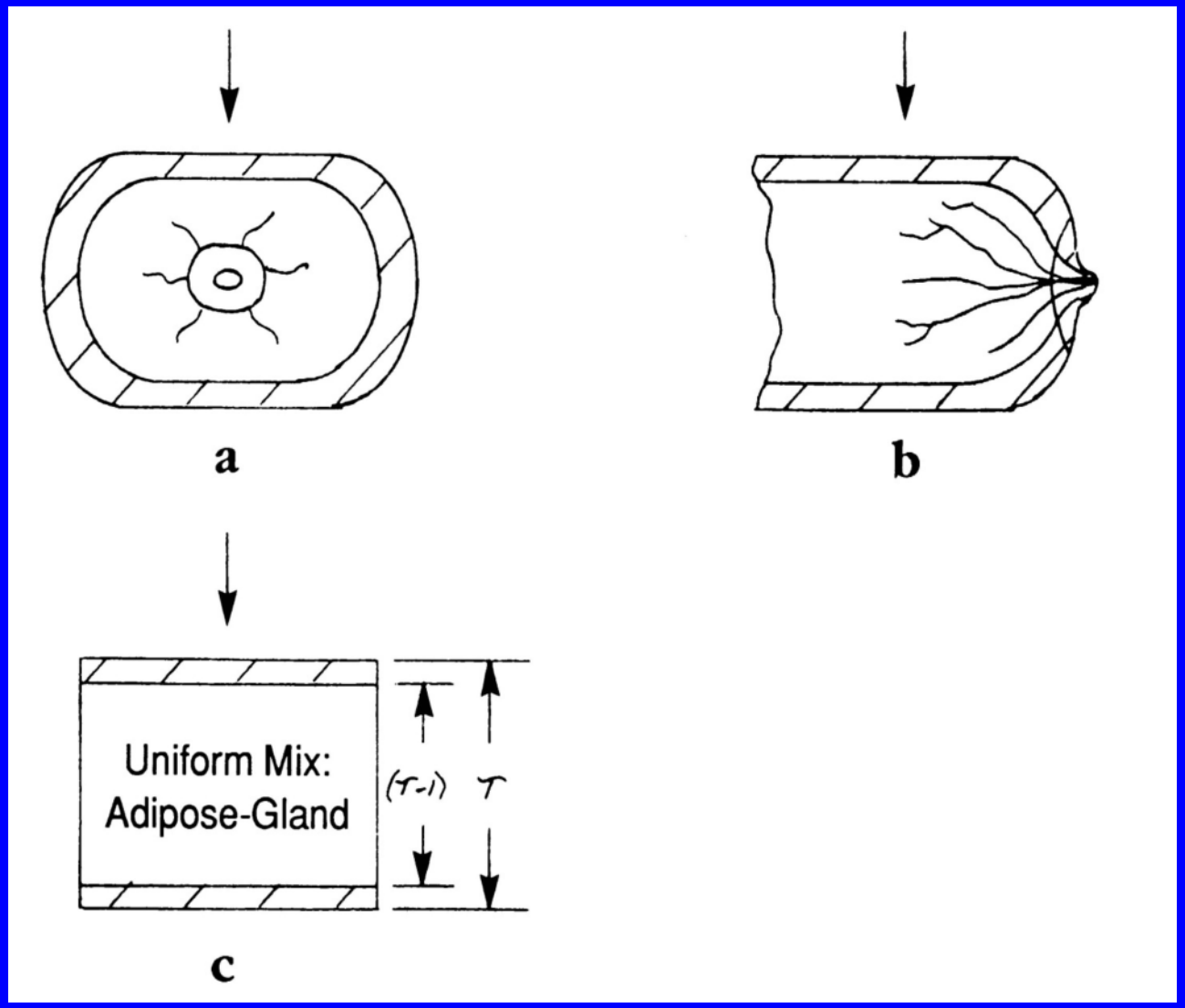

$$D = f * X$$

f - Factors

Adipose:
5.4 mGy/R

Glandular:
7.9 mGy/R

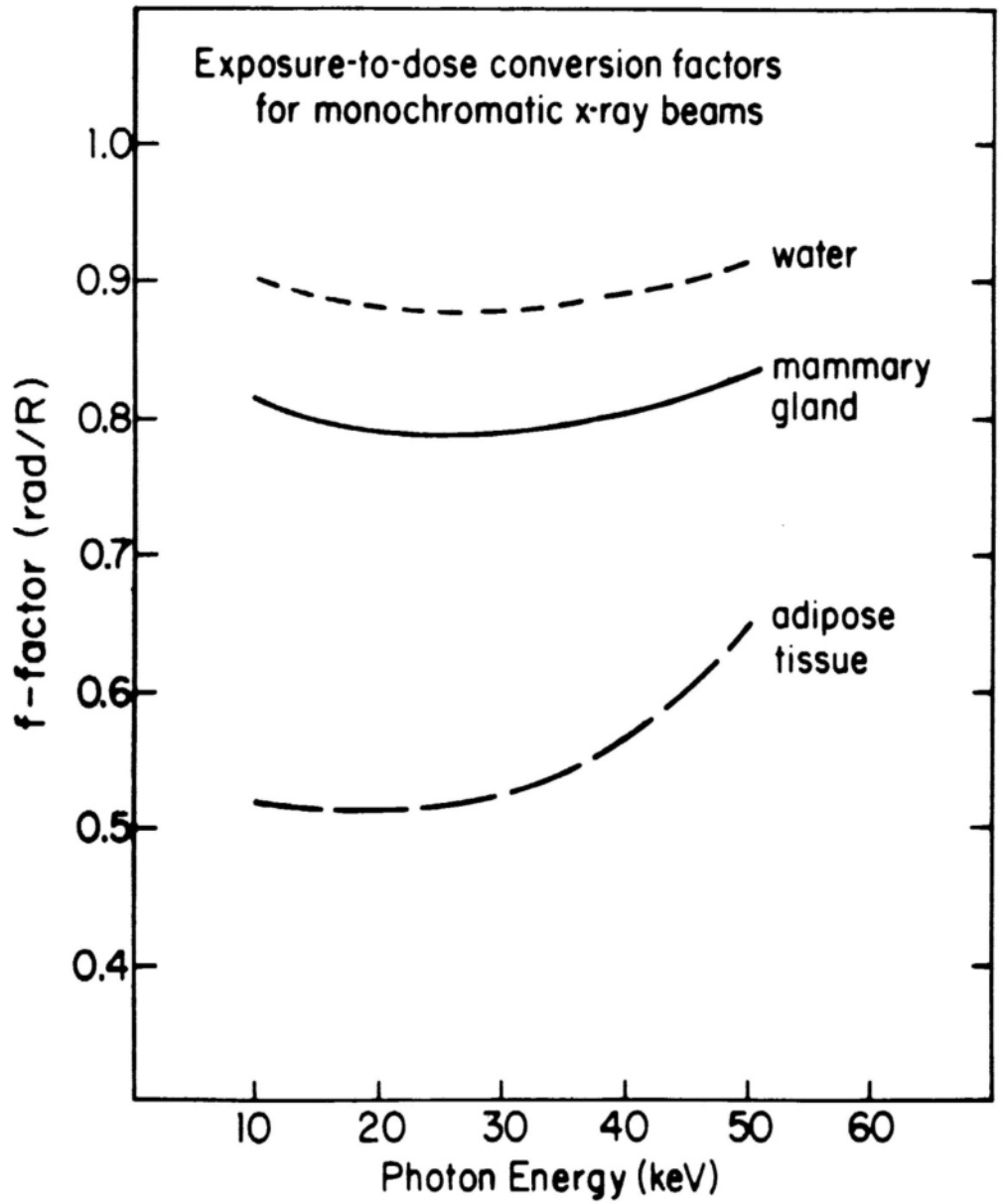

Dose and Exposure vs Thickness

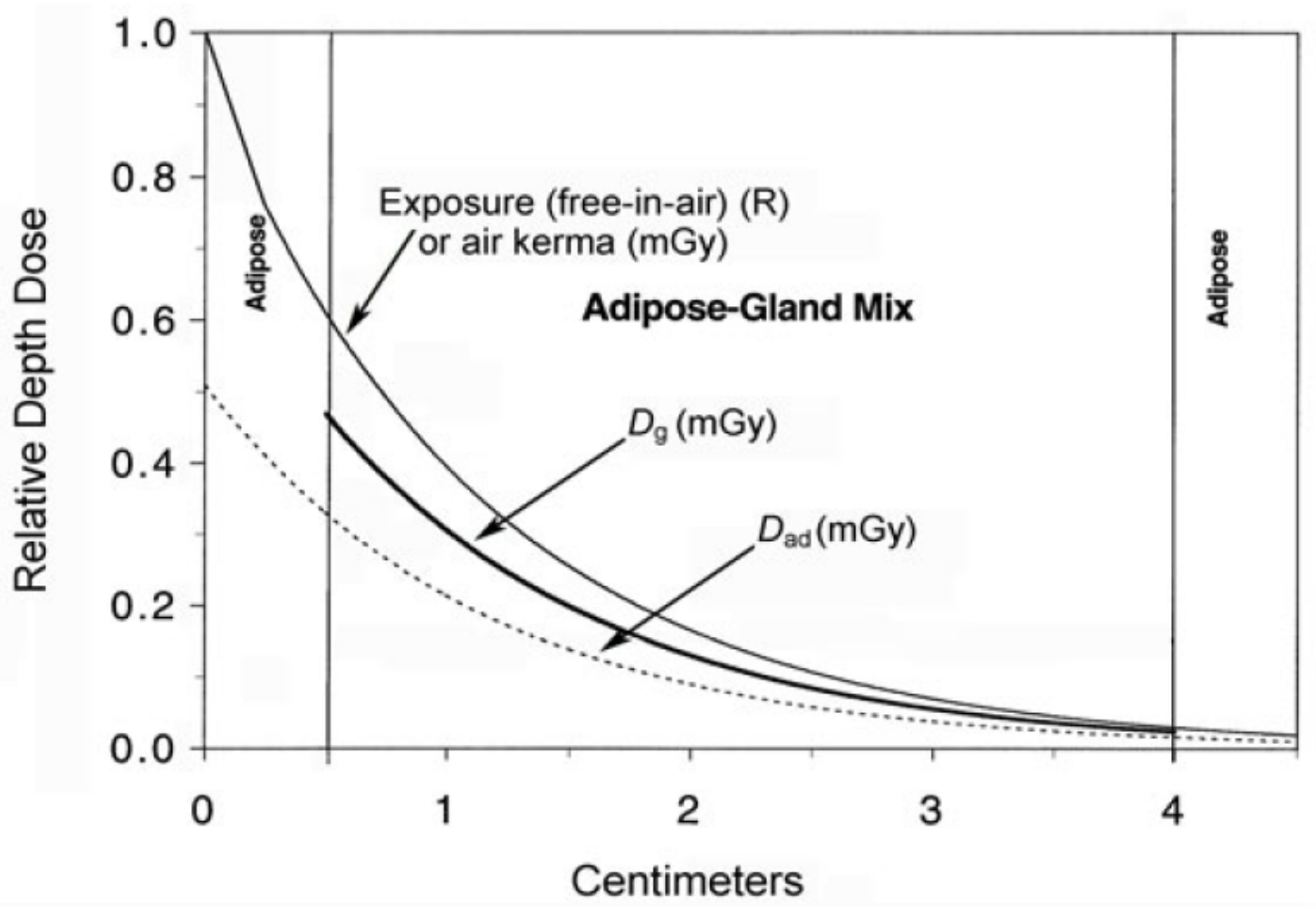

Units

- Exposure: C/kg* or R
- Dose: Gy* or rad

*SI Units

Factors Affecting Dose

- For a properly exposed film
- Assume only mAs changes, not kVp changes
  - Some AEC modes may raise or lower kVp as well as mAs

Exposure Time

INCREASE TIME, INCREASE DOSE

Peak Tube Potential - kVp

INCREASE kVp (& decrease mAs),

DECREASE DOSE (and Contrast)

Voltage Waveform

- Constant Potential - High or Medium Frequency
- Three - Phase
- Single - Phase

INCREASE CONSTANCY, DECREASE DOSE

X-Ray Tube Target

- Molybdenum (Mo)
- Rhodium (Rh)
- Tungsten (W)
- Others for Digital (?)

HIGHER Z, DECREASE DOSE (and Contrast)

X-Ray Tube Filter

- Molybdenum (Mo)
- Rhodium (Rh)
- Aluminum (Al)

- Thickness

INCREASE HVL, DECREASE DOSE (&Contrast)

Breast Size

INCREASE THICKNESS, INCREASE DOSE

Breast Composition

- More Adipose, Lower Dose
- More Glandular, Higher Dose

Compression

- Material
- Thickness
- Pressure

INCREASE COMPRESSION, DECREASE DOSE

Grid

- Ratio
- Transmission (Bucky Factor)

REMOVE SCATTER, INCREASE DOSE

Distances

- Source -Image Distance (SID)
- Source-Object Distance (SOD)
- Object-Image Distance (OID)
- Magnification (M)
- M=SID/SOD = 1 + OID/SOD

INCREASE M, INCREASE DOSE

(Unless air-gap w M allows removal of grid)

Image Receptor

INCREASE SPEED, DECREASE DOSE

- (May increase quantum mottle)
- (What is correct dose for digital imaging?)

Processing

- Chemicals
- Development Time
- Development Temperature

INCREASE SPEED, DECREASE DOSE

X-Ray Tube Focal Spot

NO EFFECT ON DOSE

- Assume proper calibration
- Assume no Reciprocity Failure

Measurement Instruments

- Ionization Chamber
- Electrometer
- Aluminum Filters

Ionization Chamber

- Collection Volume
- Energy Response
- Wall Material

Mammography Ionization Chamber

Mammo Ion Chamber Energy Response

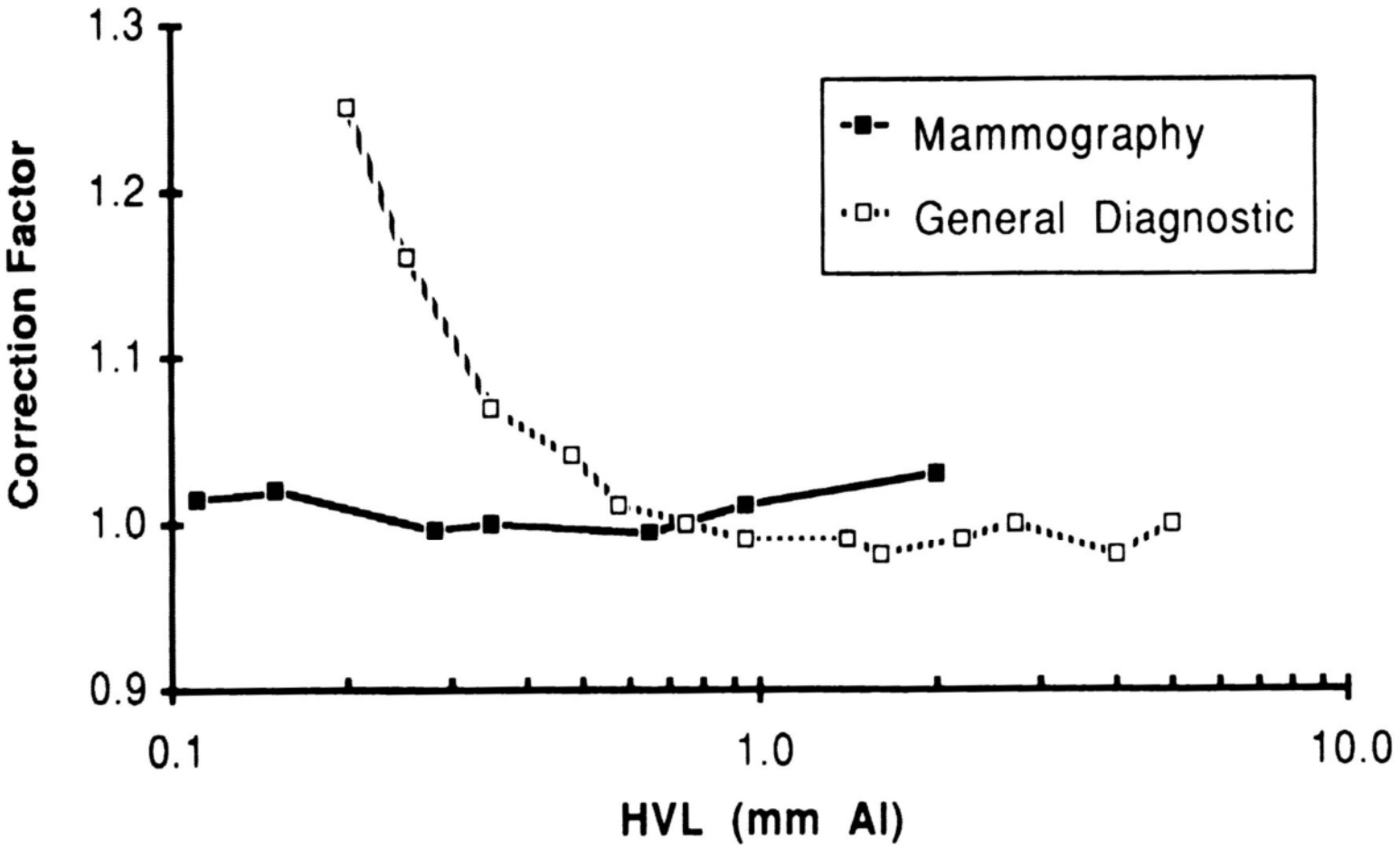

Aluminum Filters

- Thickness
- Uniformity
- Purity

Ring Badge with TLD Chip

Thermoluminescent Dosimeters(TLD)

- Patient Surface Measurements
- Care in Selection of Chips
- Care in Handling and Annealing
- Energy Corrections
- Fading Corrections

TLD Energy Response

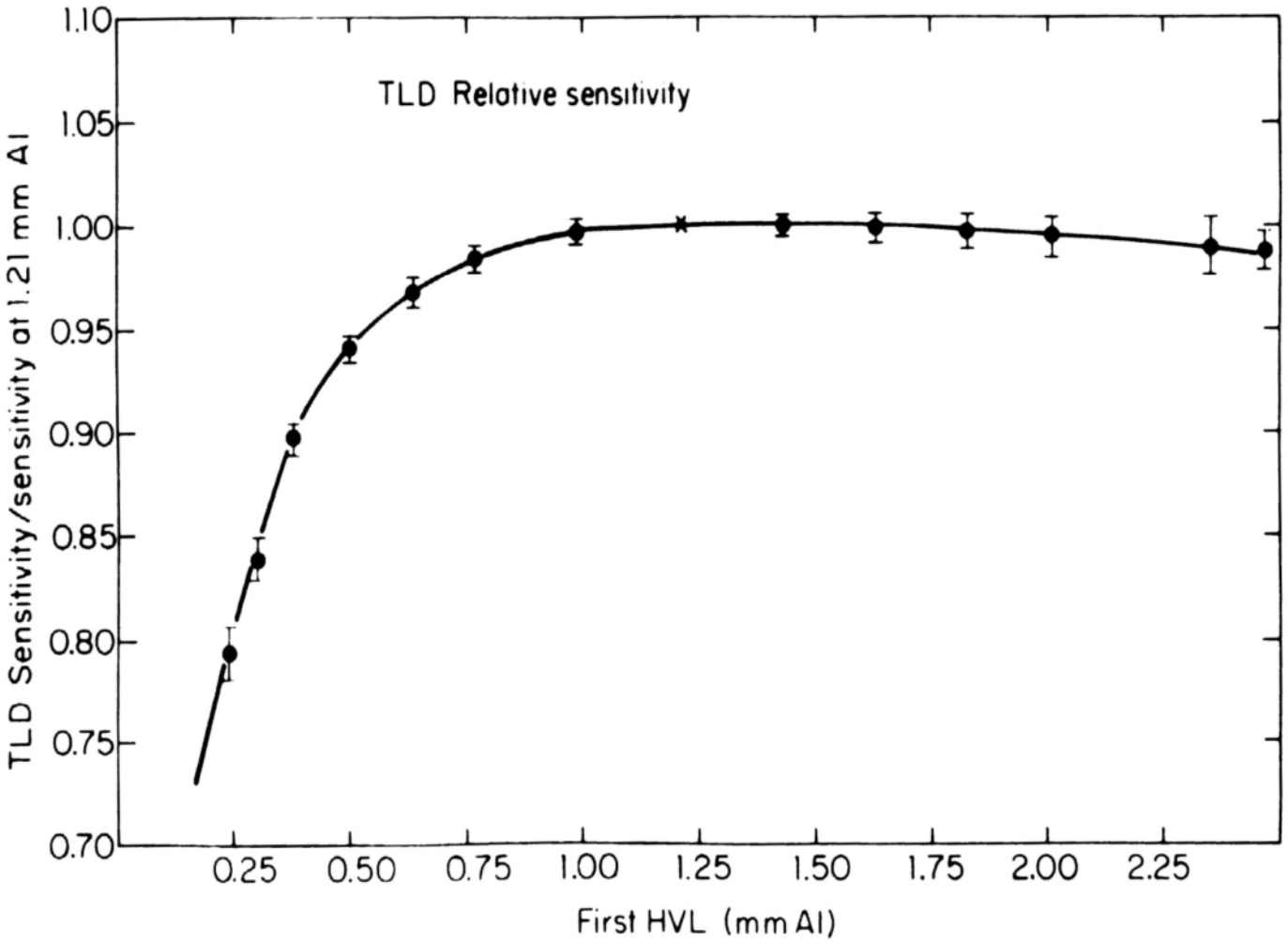

Dose Phantoms

- For AEC Dose Evaluation
- Materials - Composition
- Tissue Equivalence
  - Adipose-Glandular Mix
- Thickness Range: 2 to 8 cm

Dose Phantoms

- ACR Phantom
- 0.5 and 1.0 cm slabs of
  - Acrylic
  - BR-12

ACR-MAP Mammography Phantom

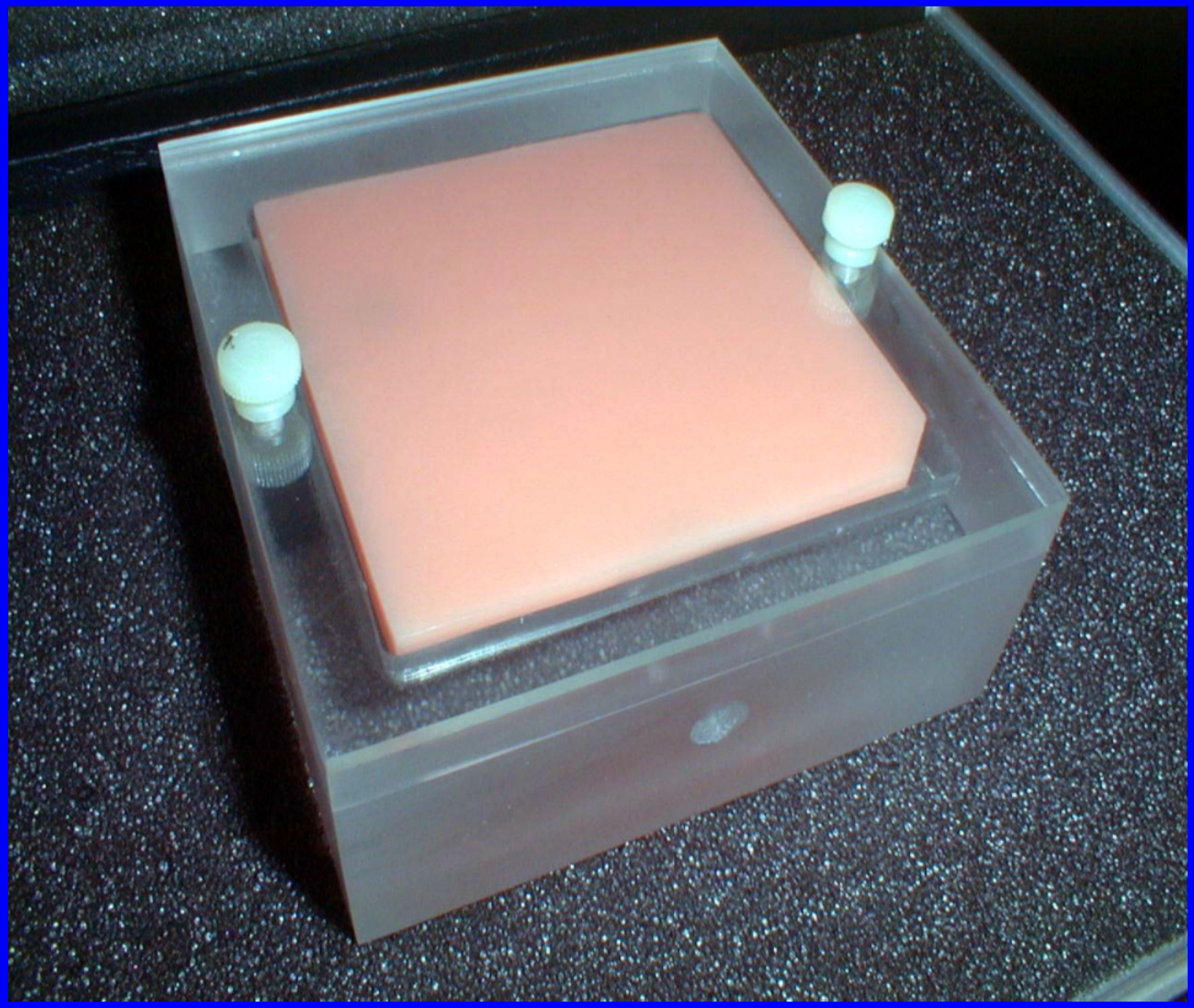

ACR Exposure Set Up

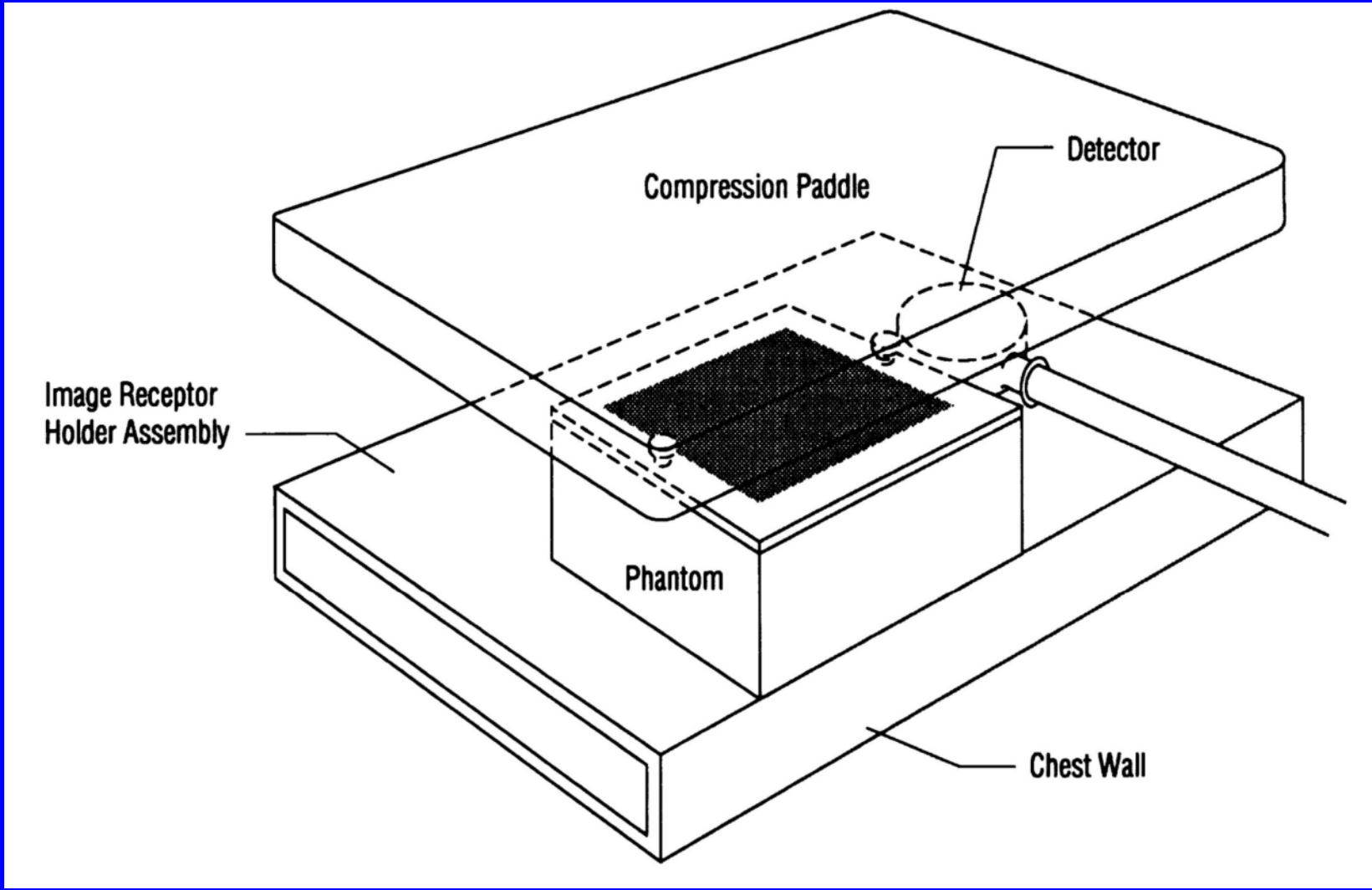

$$(D_g)_{av} = (D_{gN})_{av} * X_a$$

Exposure to Dose Conversion (mGy/R)

Mo Target
Mo Filter

50%Adipose
50%Glandular

kVp	HVL	4 cm	5 cm	6 cm
29	0.30	1.64	1.32	1.09
	0.32	1.73	1.39	1.15
	0.34	1.82	1.46	1.21
	0.36	1.91	1.54	1.27
31	0.31	1.71	1.37	1.14
	0.33	1.80	1.45	1.20
	0.35	1.89	1.52	1.26
	0.37	1.97	1.59	1.32

From: Wu, Barnes and Tucker.
Radiology 1991; 179:143-148.

Other D_{gN} References

- Mo/Rh and Rh/Rh:

  Wu, Gingold, Barnes, Tucker. Radiology 1994, 193:83-89 (Reproduced in NCRP 149)

- Magnification Mammography:

  Liu, Goodsitt, Chan. Radiology 1995; 197:27-32.

- Mo/Mo and W/Al:

  NCRP Reports No. 85 and 149

What to Measure

- Exposure In-air at Breast Surface
- Half-value Layer
- Compressed Breast Thickness
- Estimate of Tissue Composition

Steps: Dose Calculation

- Measure X_a, Exposure In-Air at Surface
- Determine kV_p & Target Material
- Determine Compressed Breast Thickness
- Measure HVL (Type 1145 Aluminum)
- Estimate Adipose / Glandular Mix
- Look Up $(D_{gN})_{ave}$ in Table
- Calculate $(D_g)_{ave} = (D_{gN})_{ave} * X_a$

ACR 1999 Mammography QC Manual

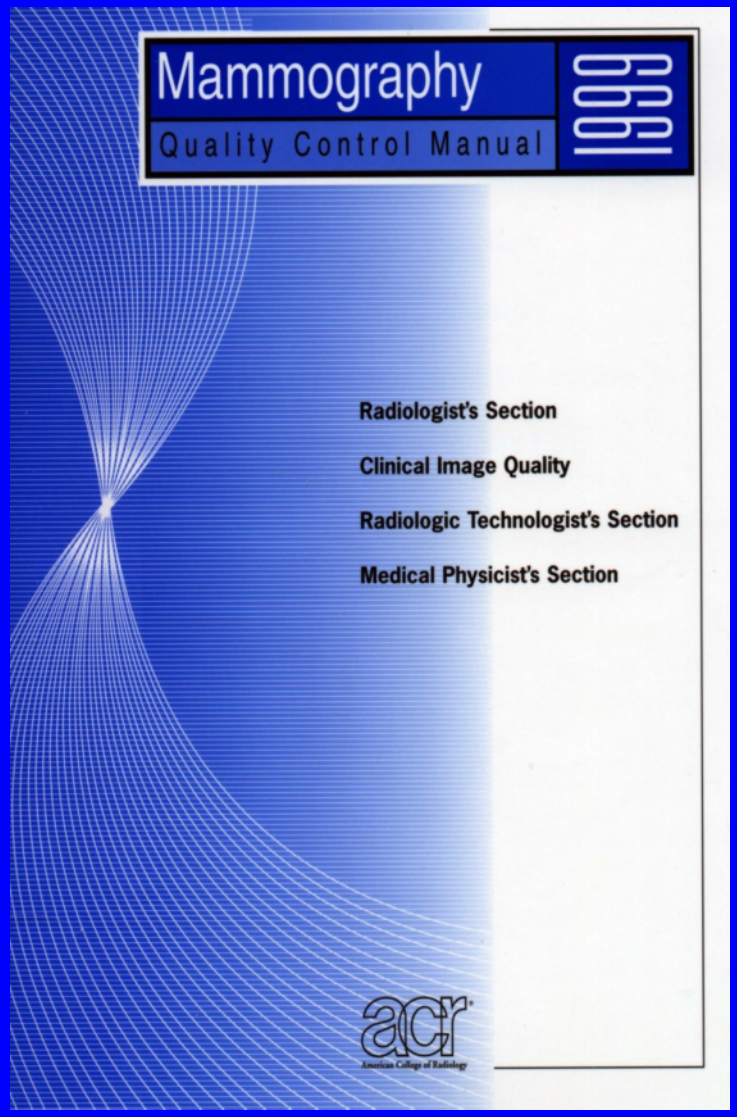

ACR 99 Breast Dose Form

10. Breast Entrance Exposure, AEC Reproducibility, Average Glandular Dose, and Radiation Output Rate

Imaging mode:		SID (cm):	
Screen type:		Source-detector distance (cm):	
Film type:		Source-bucky distance (cm):	
Cassette size(cm):		Dosimeter used:	
Field Restriction:		Energy correction factor:	

Breast thickness (cm)	4.2			
Phantom				
Nominal kVp setting				
Target material	Mo			
Filter	Mo			
AEC mode				
Density control setting				
Measured HVL (mm Al)				

Breast Entrance Exposure and AEC Reproducibility:

	R	mAs	R	mAs	R	mAs	R	mAs
Exposure #1								
Exposure #2								
Exposure #3								
Exposure #4								
Mean values								
Standard deviations (SD)								
Coefficient of variation (CV)								

ACTION LIMIT: ACR/MQSA - If coefficient of variation for either R or mAs exceeds 0.05, seek service.

Average Glandular Dose:

Inv Sq corrected skin exp				
Dose conversion factor from Tables 1-3 (mrad/R)				
Computed average glandular dose (mrad)				

ACTION LIMIT: ACR/MQSA - If average glandular dose exceeds 300 mrad (3 mGy) for 4.2 cm effective breast thickness, seek service or technique adjustment. Corrective action must be taken before futher examinations are performed if the test results fail MQSA regulations.

Radiation Output Rate:

3 sec,	kVp	Anode	Filter	SID (cm)	Exp (mR)	mAs	Time (sec)	**Rate (mR/s)**	**Kerma (mGy/s)**
4.5 cm above	28	Mo	Mo						
breast support	28	Mo	Mo						

Air Kerma (mGy/sec) = Exp Rate (mR/s) x 0.00873 mGy/mR

ACTION LIMIT: ACR - If output rate is less than 800 mR/s (7.0 mGy/s), seek service.
MQSA - If output rate is less than 513 mR/s (4.5 mGy/s), seek service. After 10/28/2002, this value changes to 800 mR/s (7.0 mGy/s).

ACR Breast Dose Entry

10. Breast Entrance Exposure, Average Glandular Dose and Radiation Output Rate

Average glandular dose for average breast is below 3 mGy (300 mrad)		
Average glandular dose to a 4.2-cm-thick breast on your unit is		mrad
Radiation output rate is ≥ 800 mR/sec (ACR); 513 mR/sec (MQSA)		mR/sec

What to Report

- Mean Glandular Dose

Recommendations:Mean Glandular Dose

- 4.5* cm Compressed Breast
- 50% Adipose / 50% Glandular
- Dose per view

*ACR Phantom is actually more like 4.2 cm

Recommendations: Screen-Film with Grid

- ACR MAP 3 mGy
- MQSA 3 mGy
- NY, RI 3 mGy
- CA 3 mGy (was 2 mGy)
- NCRP SC-72 3 mGy

Full Field Digital Mammography(FFDM)

- Currently no new recommendations
- Calculate dose with ACR D_{gN} Tables for screen/film imaging
- Continue to use 3 mGy per view recommendation
- Required dose is determined by quantum mottle-image quality considerations rather than film O.D.

Stereotactic Breast Biopsy (SBB) Units

- Chamber positioned in air
  - Not enough room in field for phantom
  - Assure that entire chamber is irradiated
  - Use typical patient technique for 4.5 cm
- Use ACR D_{gN} Tables for Full Breast Screen/Film Imaging to Calculate Dose
- 3 mGy Recommendation Applies to both Digital and Sceen/Film SBB systems

ACR MAP Dose

- 5 Groups of 3 TLD Chips - 4 with Al
- Mean Glandular Dose from
  - Compressed Breast Thickness
  - Breast Surface Exposure In-air
  - HVL
  - Published Tables

Published Dose Surveys-ACR Phantom

All Facilities Screen Film with Grid

- ACR-MAP: 6265 Facilities
  - 1992 1.27 mGy
- CDRH / MQSA: 4172 Facilities
  - First Inspection 1.5 mGy
  - Second Inspection 1.6 mGy

Mammography in U.S. 1988 - 1997

	1988	1992	1995	1996	1997
MGD (mGy)	1.33	1.49	1.50	1.56	1.60
ESE (mR)	683	NA	910	943	965
HVL (mmAl)	0.38	0.35	0.33	0.33	0.33
Optical Density	0.96	1.18	1.43	1.48	1.52
Phant Score	10.3	11.2	11.9	12.0	12.2

From Suleiman, Spelic, McCrohan, Symonds, Houn
Radiology 1999;210:345-351

Dose for Digital Mammography

- Preliminary ACRIN Values - RSNA 2001

  E. Berns & R.E.Hendrick

  Dose to ACR/MQSA Accreditation Phantom

- Fischer SenoScan - 1.37 mGy
- GE Senographe 2000D - 1.50 mGy
- Screen-Film - 1.68 mGy

ACRIN-DMIST MGD Results 2006

- Five types of FFDM Units:
  - Range: **1.31 – 1.98 mGy,** Average: **1.62 mGy**
- DMIST Screen-Film Units:
  - Average: **1.90 mGy**

Bloomquist et al. Med Phys 2006; 33 (3) 719 - 736

RSNA 2006 – Berns, Hendrick, Barke SSJ02-01 (3:00 PM-Tuesday 11/28/06)

- Comparison of dose and image quality for four FDA Approved FFDM Units (Added 5th Unit-GE Essential in talk)
- For ACR Phantom:
  - MGD Range: 0.9 – 2.3 mGy
  - Factor of 2.5
- Variations of image quality did not strictly track with dose

ACR MAP Phantom Failures vs. Dose

- MGD vs Phantom Failure Rates for 31, 535 mammography units from 1993 - 99
- Failure Rate 11% over all doses
- Failure Rate 43% for doses from 0.26 - 0.5 mGy
- Failure Rate 6% for doses from 1.5 - 2.0 mGy
- Increasing failure rate from 2.0 - 6.0 mGy

Haus AG, Yaffe MJ, Feig SA, Hendrick ER, Butler PA, Wilcox PA, Swati B. Med Phys 2001; 28: 2297 - 2301.

Is 50% Adipose/50% Glandular Average?

"A phantom composed of 30% glandular and 70% adipose tissue allows closer simulation of the phototimer response of the mammographic x-ray unit for the average breast. The phantom currently used contains 16% more glandular tissue than the average breast."

Geise RA, Palchevsky A. Radiology 1996; 198: 347-350

Published Dose Survey - Patients

Mayo Clinic - Screen Film with Grid

- 6,006 Women - 24,471 Mammograms
- Median MGD: 2.6 mGy
- Median Breast Glandular Tissue: 28%
- Median Compressed Breast Thickness: 5.1 cm

Kruger RL, Schueler BA. Med Phys 2001; 28:1449 - 1454.

Assumptions: Dose Calculation

- Firm Compression
- Uniform Cross Section
- 0.5 cm Adipose Layer - Top & Bottom
- Adipose / Gland Mix:
  - 100% / 0%
  - 70%/30%*
  - 50% / 50%
  - 0% / 100%

*Tables for 70%/30% from X. Wu included in NCRP 149

RELATIONSHIP OF MEAN GLANDULAR DOSE TO PATIENT RISK

Risk Negligible for Diagnostic Exam of a Given Woman

Benefits and Risks Must Be Known for Screening of Asymptomatic Women

NCRP 149 Conclusions

- Mammographic equipment should be chosen to provide acceptable image quality at a typical mean glandular dose (for a two-view examination) of 6 mGy, or less for screen-film image receptor with grid for a patient having 4.5 cm thick compressed breasts of 50 percent adipose and 50 percent glandular tissue composition.

NCRP 149 Conclusions

- Annual mammographic screening examinations appear to provide favorable benefit/risk ratios in terms of breast cancer mortality in women age 50 or above, if acceptable image quality and dose are maintained.

NCRP 149 Conclusions

- Results of randomized clinical trials of screening mammography for women age 40 to 49, for which 10 or more years of follow-up is available, have shown evidence of a substantial benefit in reducing mortality which exceeds any risk of radiation-induced breast cancer.

Take Home Points - Mammo Dose

- Measure Exposure - Calculate Mean Gland Dose
- Required Dose Depends on Target/Filter, kVp, HVL, Breast Thickness and Composition
- For ACR Phantom S-F: Typical Doses are 1.5 - 2.0 mGy/view with a maximum of 3 mGy
- Lowest ACR Phantom Failures for 1.5 - 2.0 mGy
- Average Patient doses may be somewhat higher
- Minimal Benefit will outweigh any risk (NCRP)
- No specific recommendations yet for FFDM


Thank You!
rothenbl@mskcc.org