AAPM Annual Meeting
July 19, 2010

Robotic Brachytherapy - Overview of robotic brachytherapy approaches and synergistic applications

Tarun K. Podder, PhD, DABR
Assistant Professor
Department of Radiation Oncology
Kimmel Cancer Center (*NCI-designated*)
Jefferson Medical College, Thomas Jefferson University
Philadelphia, PA 19107

[***Gabor Fichtinger, PhD***
Professor, Cancer Care Ontario Research Chair
Percutaneous Surgery Laboratory (Perk Lab)
School of Computing
Queen's University, Canada]

Outline

- Introduction
- Robot-assisted brachytherapy
- Robotic systems at various institutes
- Summary

Conventional Prostate Seed Implant (PSI)

Pubic Arch

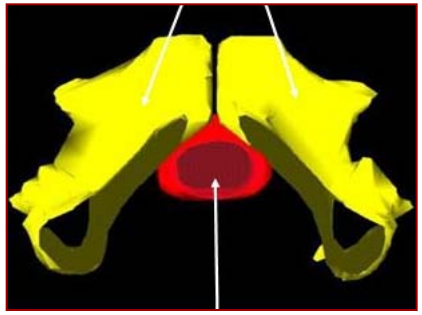

Prostate

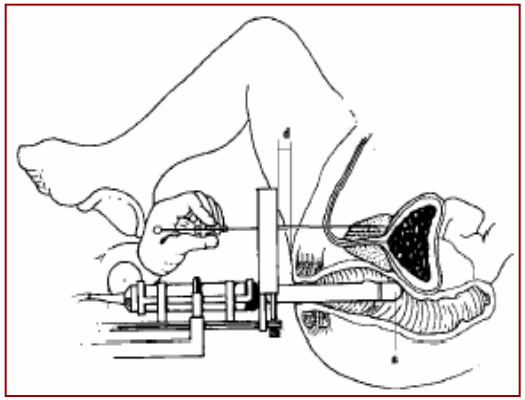

Fixed template

Needle angulation

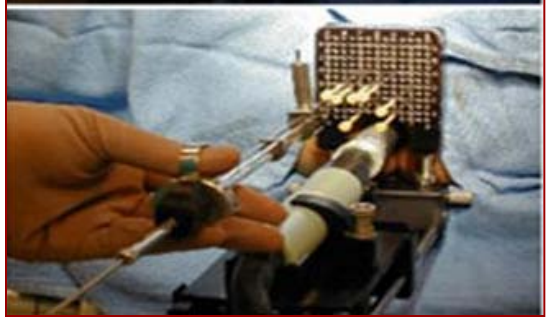

Fatigue & exposure

- Fixed template – limited maneuverability
- PAI – needle angulation difficult
- Consistency, accuracy, efficiency – techniques & human factors
- Clinicians' fatigue

Brachytherapy technique

- Prostate anatomy with critical structures – peripheral distribution of seeds (5-6 cm sq.)
- Needle – x, y, z motion; anulation about x axis; (rotation about z axis)
- Seed – along the needle path
- Physical template – reduced maneuverability
- Prostate immobilization
- Safety and accuracy

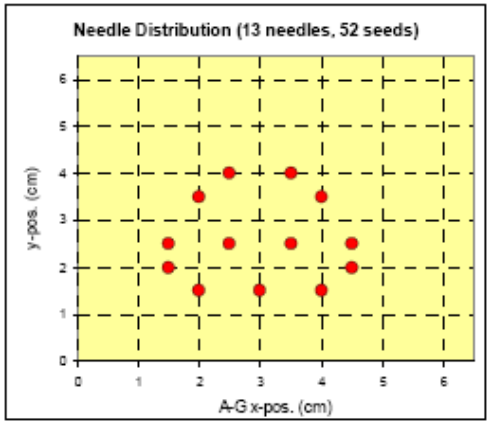

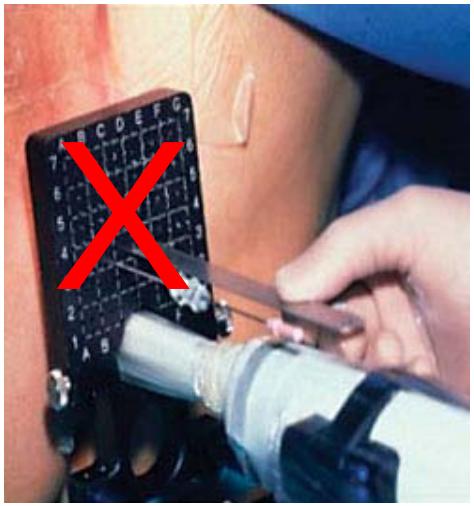

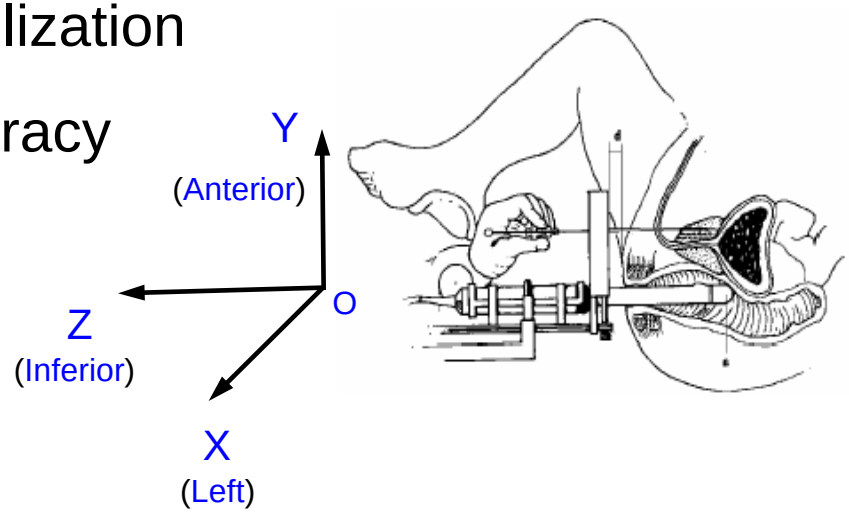

What is meant by a “ROBOT”?

“A robot is a reprogrammable multi-functional manipulator designed to move materials, parts, tools, or specialized devices, through variable programmed motions for performance of a variety of tasks.”

- Robotic Institute of America (RIA)

PUMA 500/560 robots

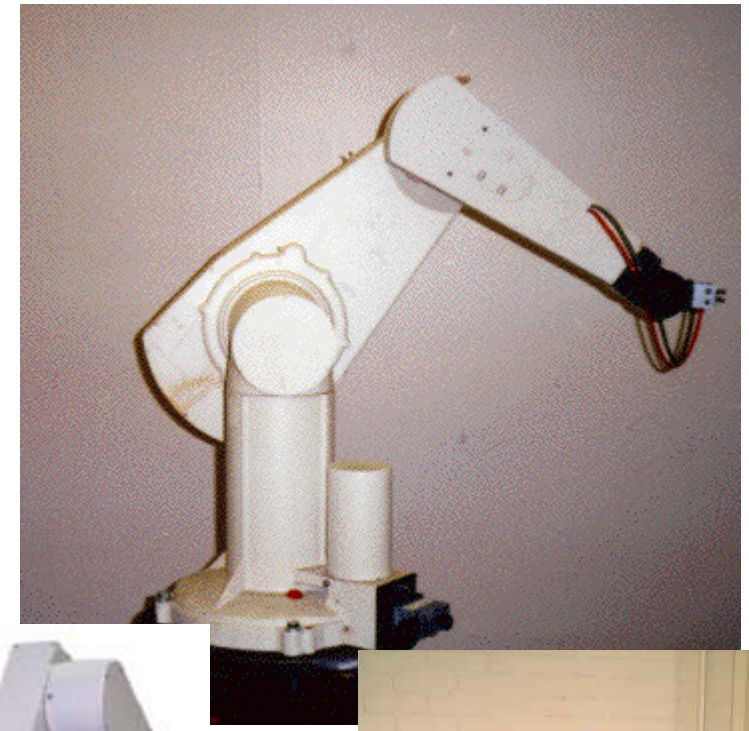

<u>Unimation Company</u>

Unimate - first commercial robot, 1965

PUMA (***P****rogrammable* ***U****niversal* ***M****achine for* ***A****ssembly*) was developed by Victor Scheinman in 1975

Robots in different applications

Robot fiction

Humanoid robot

Underwater robots

Space robot (from JPL)

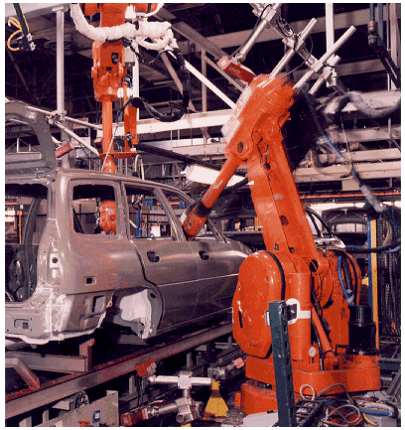

Industrial robots

Surgery

KUKA robot
(CyberKnife)

Radiation Therapy

Medical robots

- Introduction
- Robot-assisted brachytherapy
- Robotic systems at various institutes
- Summary

• Robot-assisted brachytherapy

Robot-assisted brachytherapy

Main objectives:

- Improve accuracy of needle placement and seed delivery
- Improve consistency of seed implant
- Improve avoidance of critical structures (urethra, pubic arch, rectum, bladder),
- Reduce the learning curve
- Reduce clinician's fatigue
- Reduce radiation exposure

Robot-assisted brachytherapy

Functional requirements:

- Quick and easy disengagement in case of emergency,
- Provision for reverting to conventional manual brachytherapy at any time
- Method for the clinician to review and approve the motion plan before needle placement,
- Visual (and/or haptic force) feedback during needle insertion,
- Visual confirmation of each seed deposition or the needle tip at the resting position

Robot-assisted brachytherapy

Functional requirements:

- Ease of cleaning and decontamination,
- Compatible for sterilization of the required components,
- Ease of operation in the OR environment,
- Robust and reliable,
- Safe for the patient, clinician, and the OR environment

Robot-assisted brachytherapy

Additional objectives for an advanced robot:

- Update dosimetry after each needle is implanted (automatic seed localization),
- Detect tissue heterogeneities and deformation via force sensing and imaging feedback,
- Reduce trauma and edema

Robot-assisted brachytherapy

Additional functional requirements for an advanced robot:

- Improvement of prostate immobilization techniques,
- Provision for periodic quality assurance checking,
- Updating implant plan at any time,
- Ability to modulate velocity and needle rotation by automatic feedback control,
- Needle steering by automatic feedback control,
- A teaching mode to simulate force/velocity patterns of expert practitioners

“Design Space” for robots

Fan, Phee *et al.* IJHR, 2006

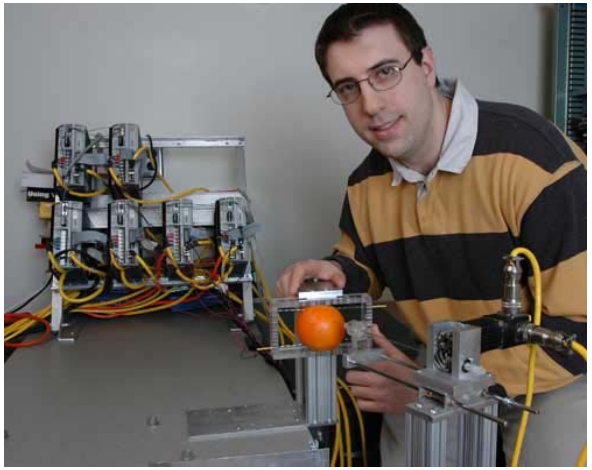

Meltsner, Thomadsen, *et al.* PMB, 2007

Yu, Podder *et al.* MICCAI 2006

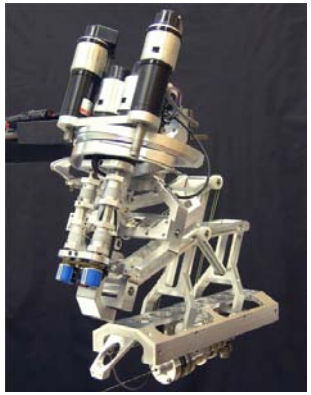

Patel *et al.* IEEE TRO, 2006

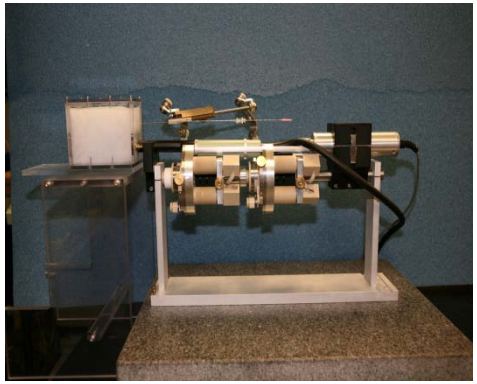

Bax *et al*. SPIE 2007

Fichtinger *et al.* MedIA, 2008

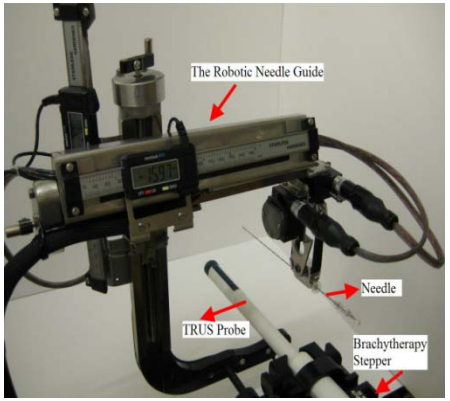

Salcudean *et al* 2010

Robot components for brachytherapy

Hardware:

- Linkage/ mechanism
- Motors/ actuators
- Encoders/ sensors
- Imaging system (TRUS/CT/ MR)
- Image grabber
- CPU (computer)
- Display unit
- Power supply, amplifier
- Controller

Software:

- Patient information handling
- Image acquisition
- Delineation of anatomic structures
- Dosimetric planning
- Needle tracking, seed detection
- Motion control and coordination
- 2D-3D visualization
- Position, vel., force feedback

How to achieve the goals?

Seed delivery accuracy –

- needle placement accuracy (motorized motion, high resolution encoders, velocity modulation)
- prostate stabilization
- seed immobilization

Avoidance of critical structures (pubic bone, rectum, bladder, urethra) –

- visual feedback
- haptic/force feedback

Compensation for edema, deformation/displacement –

- real time monitoring
- dynamic planning
- flexible maneuverability
- adaptive feedback control-loop

Safety and reliability –

- simple design, standard quality parts, redundant sensors, mechanical stops,
- ease of cleaning, decontamination and sterilization
- hazard analysis & mitigation (EMC test, IEC-60601, FDA, IRB)
- rigorous testing before clinical trial
- periodic QA

• Robotic systems at various institutes

Who are developing robotic systems for prostate brachytherapy?

Total 13 robotic systems

1. Thomas Jefferson University, USA (2) – Yu, Podder
2. Johns Hopkins University, USA (4) – Fichtinger, Stoianovici
3. University of Wisconsin, USA (1) – Thomadsen, Meltsner
4. University of British Colombia, Canada (1) – Salcudean, Spadinger
5. Robarts Research Institute, Canada (1) – Fenster, *et al.*
6. University of Western Ontario, Canada (1) – Patel, *et al.*
7. Nucletron - SeedSeletron/FIRST, Netherlands (1) – Nucletron
8. University Medical Center Utrecht, Netherlands (1) – Lagerburg, *et al.*
9. Grenoble University Hospital, France (1) – Hungr, *et. al.*

Thomas Jefferson University

EUCLIDIAN Prototype

EUCLIDIAN – **E**ndo-**U**ro **C**omputer **L**attice for **I**ntratumoral **D**elivery, **I**mplantation, and **A**blation with **N**anosensing

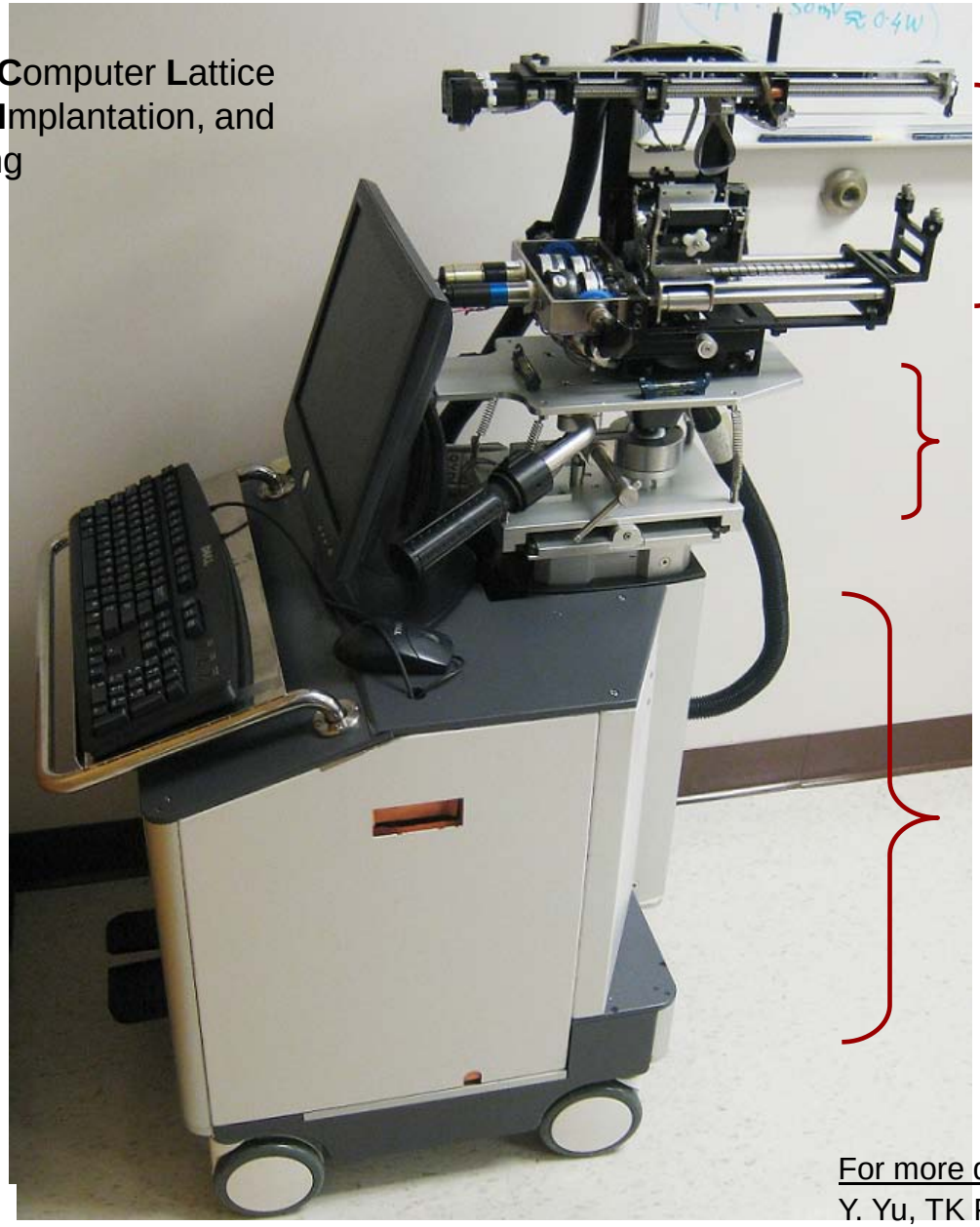

7 DOF Surgery Module

6DOF Supporting Platform

3 DOF Cart

For more details:
Y. Yu, TK Podder, *et al.*, MICCAI 2006
Y. Yu, TK Podder *et al.*, JCAS 2007

EUCLIDIAN – surgery module

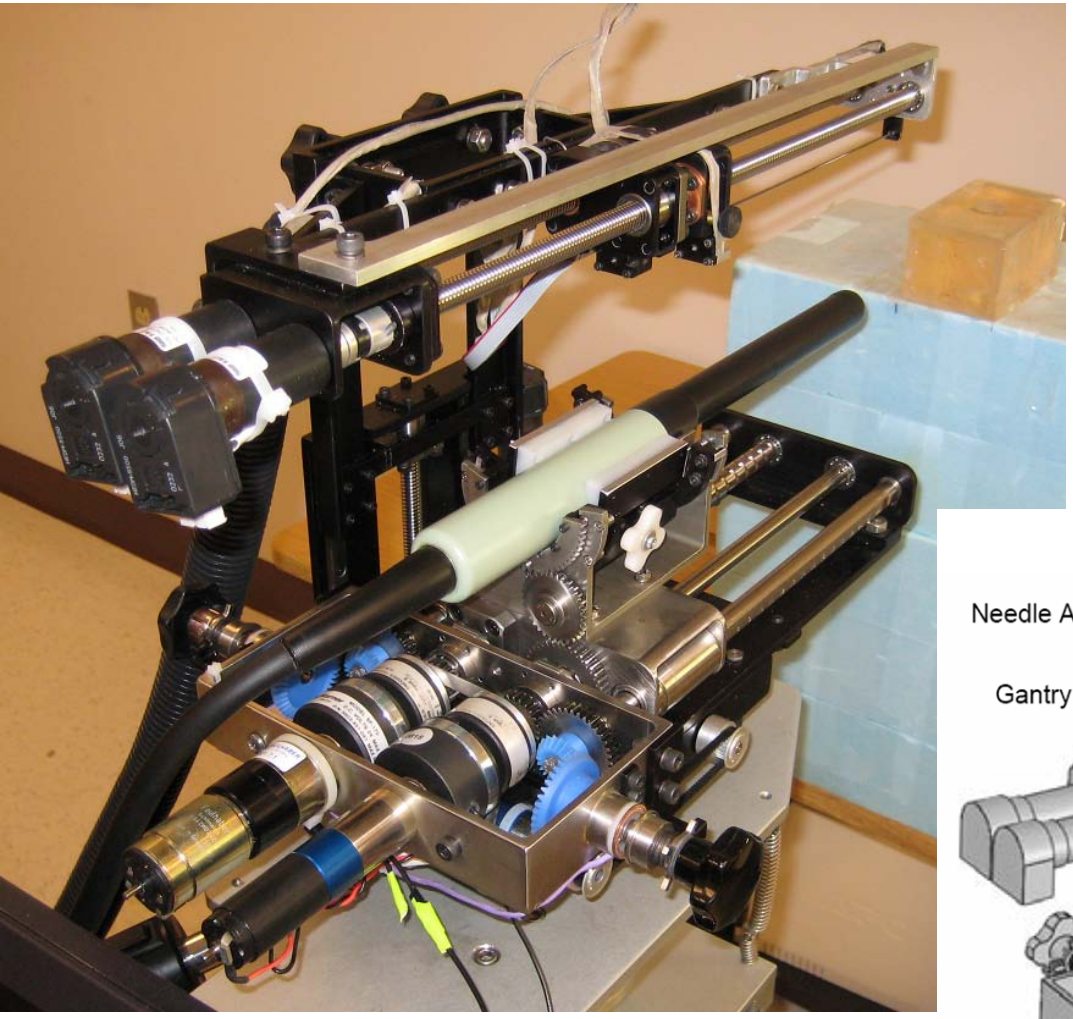

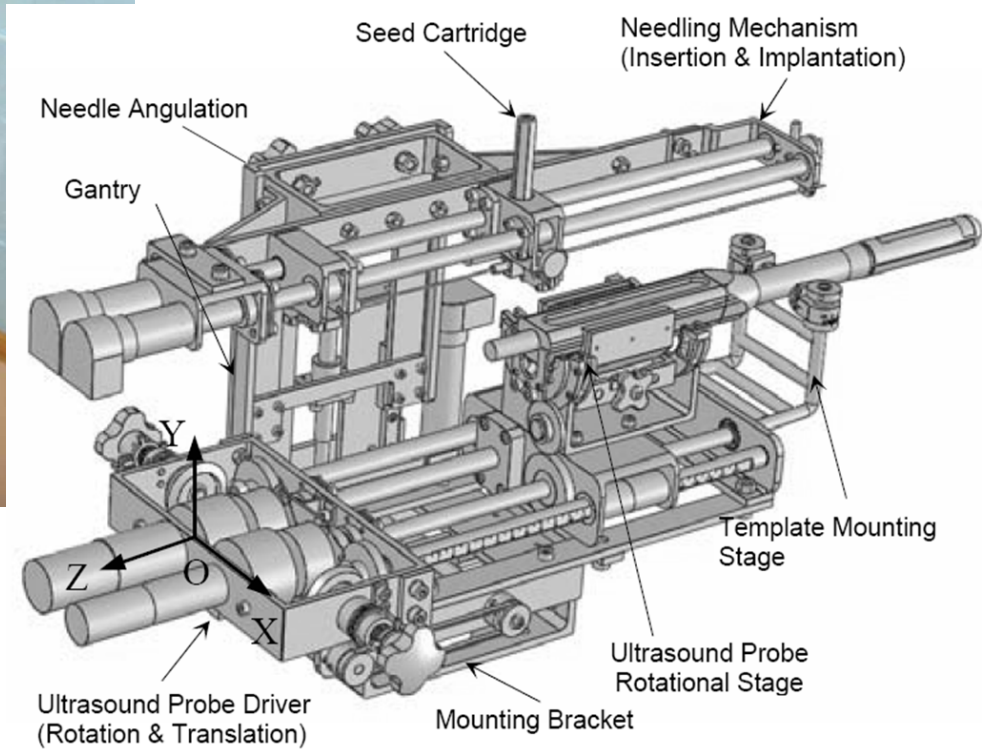

Jefferson™
Kimmel Cancer Center
NCI-designated

EUCLIDIAN Hardware (TRUS probe driver)

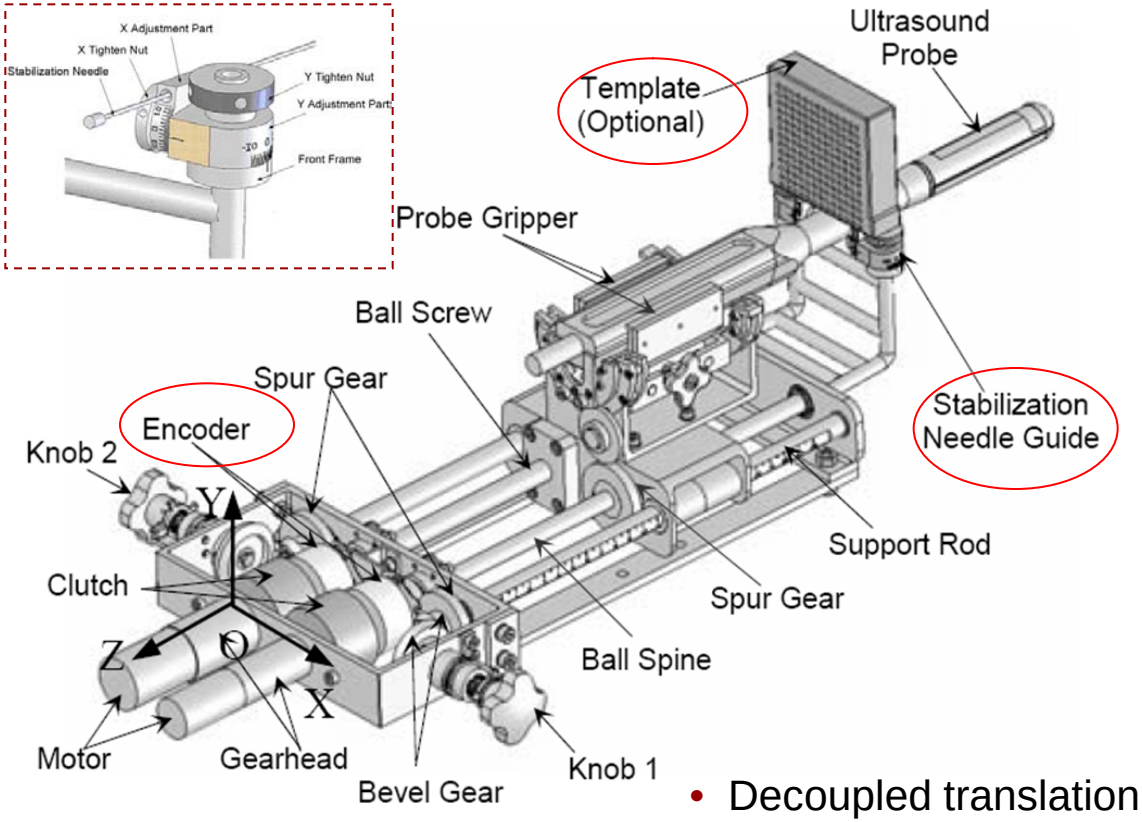

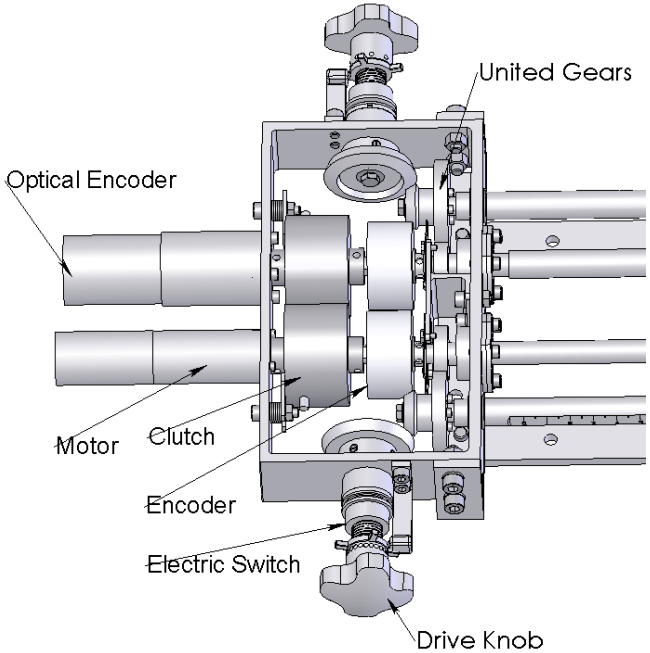

- Decoupled translation & rotation
- Motorized as well as manual
- Improved stabilization
- High resolution optical encoder
- Provision for conventional method

EUCLIDIAN Hardware (needle insertion & seed delivery)

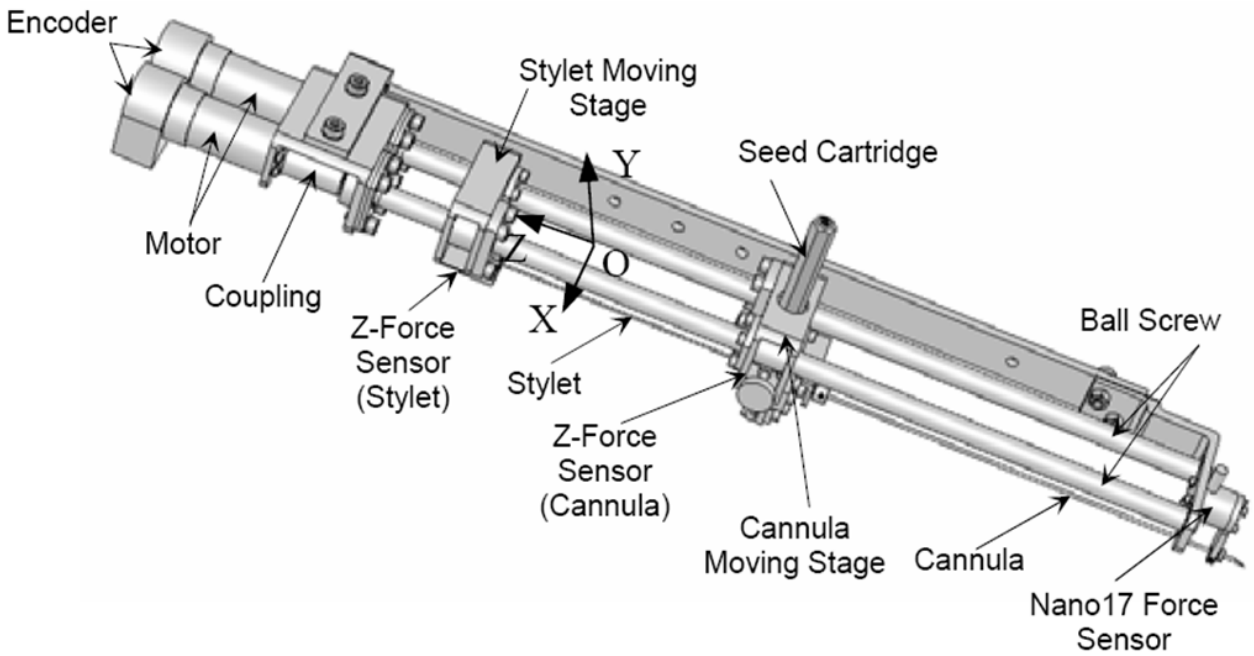

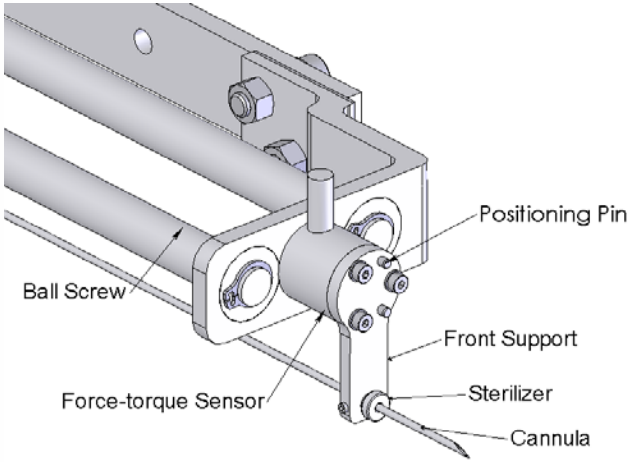

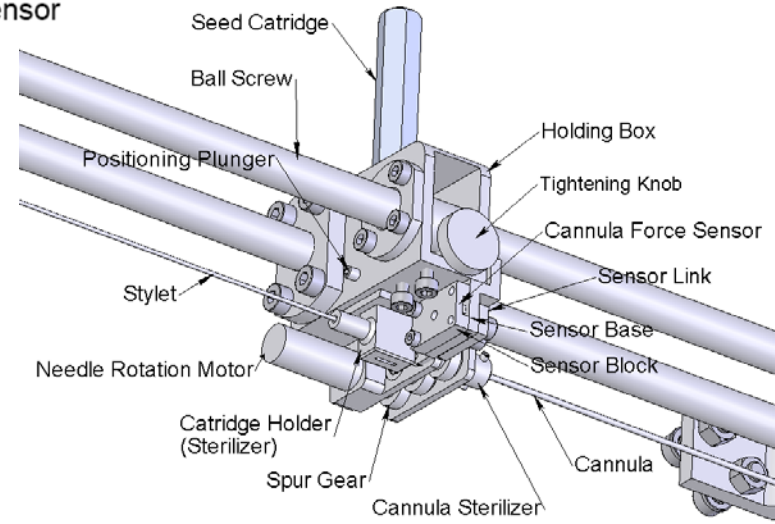

- 3 motorized motion
- Positive drive
- High resolution optical encoders
- 3 force sensors (1-Nano17, 2-pico)
- Cartridge holds 35 seeds
- Ease of cleaning, decontamination and sterilization

EUCLIDIAN Software

Tasks:

- Patient record handling
- Image acquisition
- Model building (prostate, urethra, pubic bone, rectum)
- Dose distribution planning
- 3D visualization
- Real-time monitoring

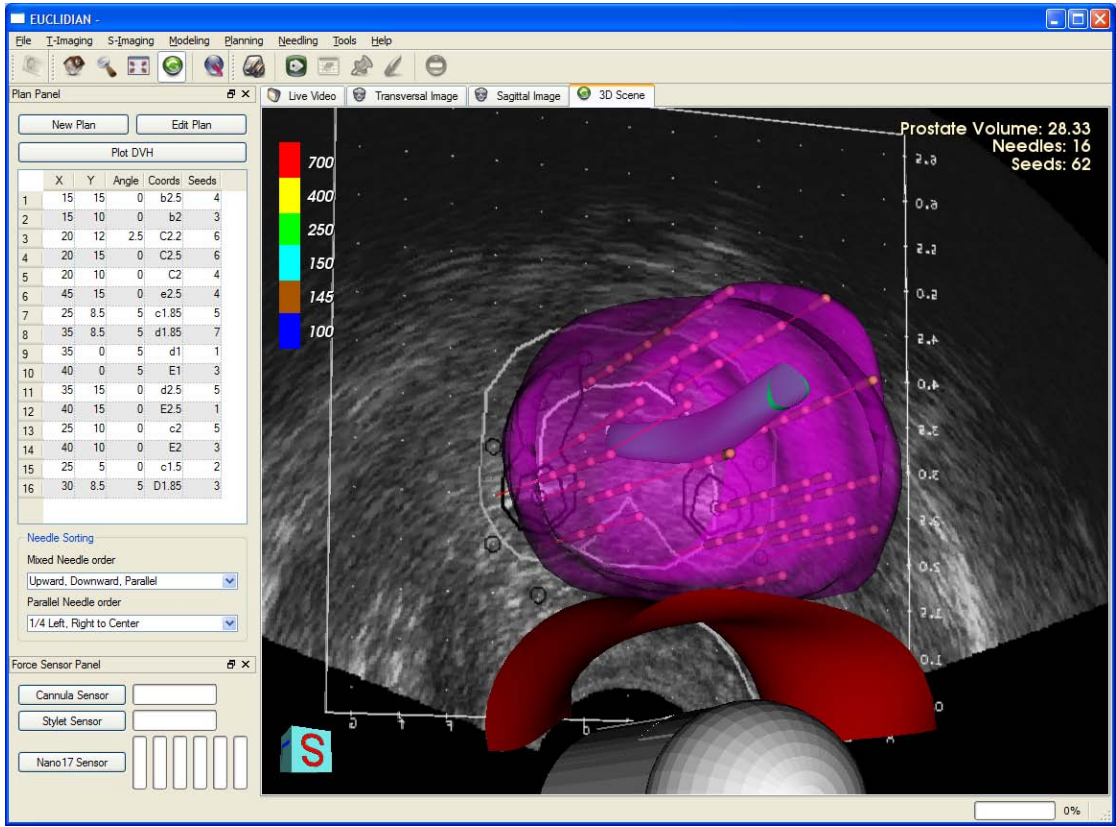

Jefferson™
Kimmel Cancer Center
NCI-designated

EUCLIDIAN – operation video

Homing Procedure

Seed Delivery

rms error of seed placement (3D) = 0.23mm (SD = 0.11mm).

Some of the features of the EUCLIDIAN

- All the hardware and software are designed and developed at home
- **Fully autonomous** ultrasound image guided system; however, at anytime the physician can takeover the control using a teach/user-pendent
- 9dof positioning module – 3dof cart and 6dof platform motorized vertical lift (y), electro-magnetic locks on x, y and z axes, 3dof rotation has mechanical locking arrangement
- **Motorized 7dof surgery module**
- No physical template required
- **3 force sensors** – to detect pubic arch interference (PAI), to confirm seed delivery, to detect needle deviation and bending
- Long seed cartridge (35 seeds) – less frequent change of cartridge
- Can cover 62mm x 67mm surgical area; **10^0 angulation**
- Dosimetric planning, 3D visualization, needle tracking, seed detection in software
- Needle and seed passages are sterilizeable, other parts are easy to clean and decontamination
- Provision for quick manual takeover (if required)
- Seed delivery **accuracy 0.23mm**
- EMC, IEC-60601, **FDA-IDE approved**

Jefferson™ Kimmel Cancer Center NCI-designated

Johns Hopkins University

TRUS Guided Robotic Approach at the Johns Hopkins University

Small 4-DOF robot replaces template. Does not alter clinical setup & workflow

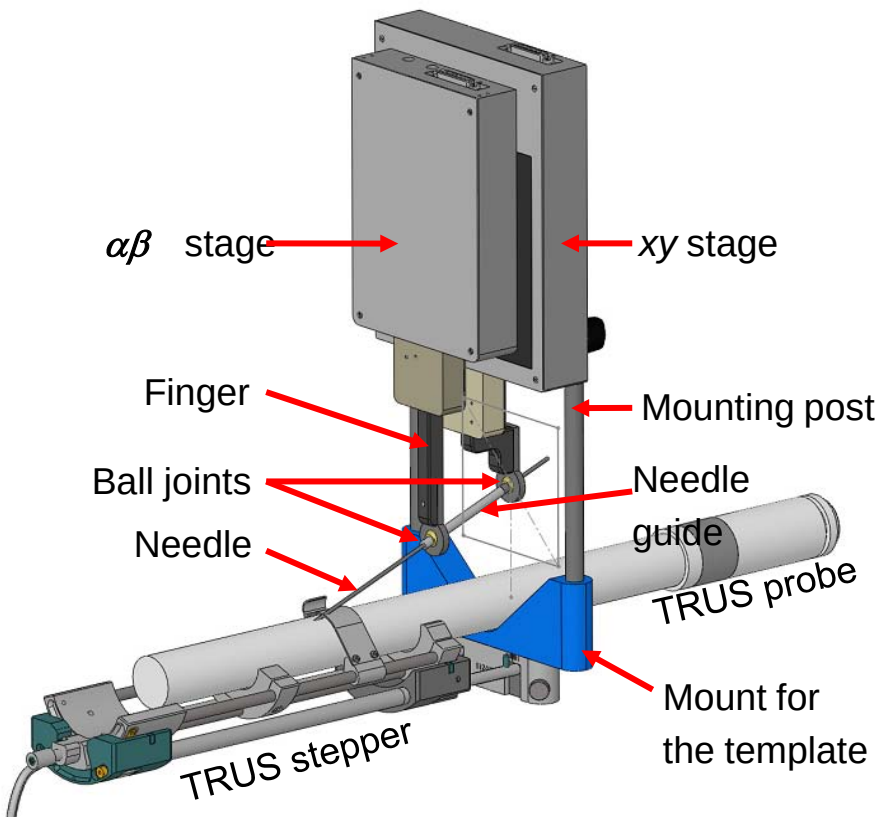

Fichtinger et al. Medical Image Analysis, 2008

Johns Hopkins University and Acoustic MedSystems, Inc.

Phase-1 Clinical Trial
Six patients thus far

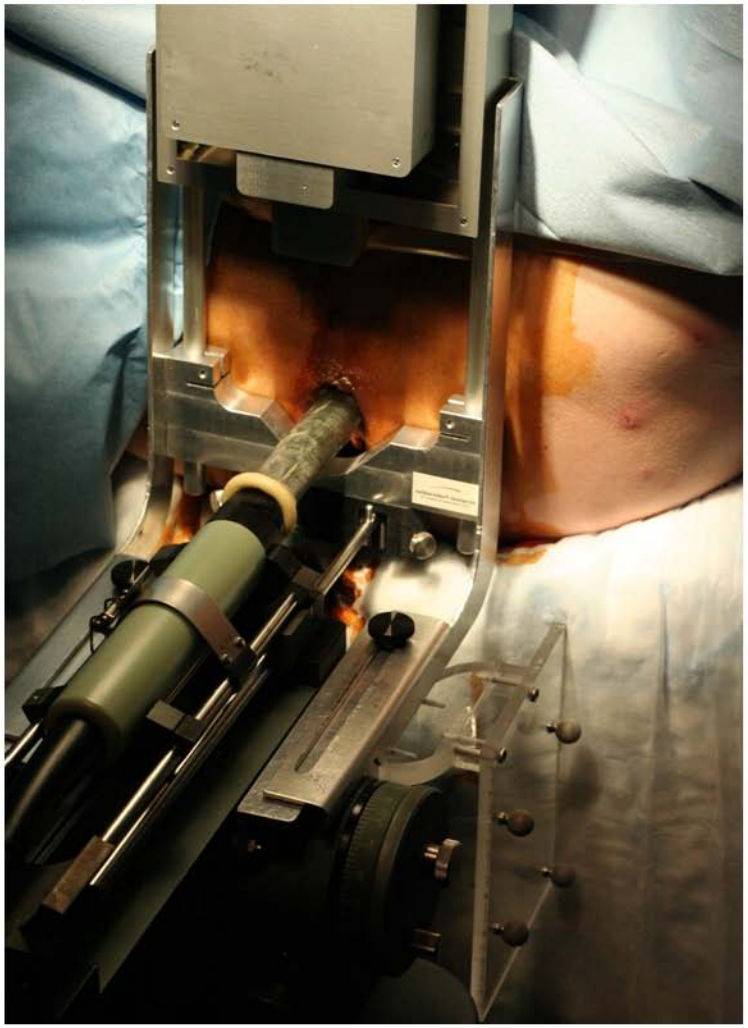

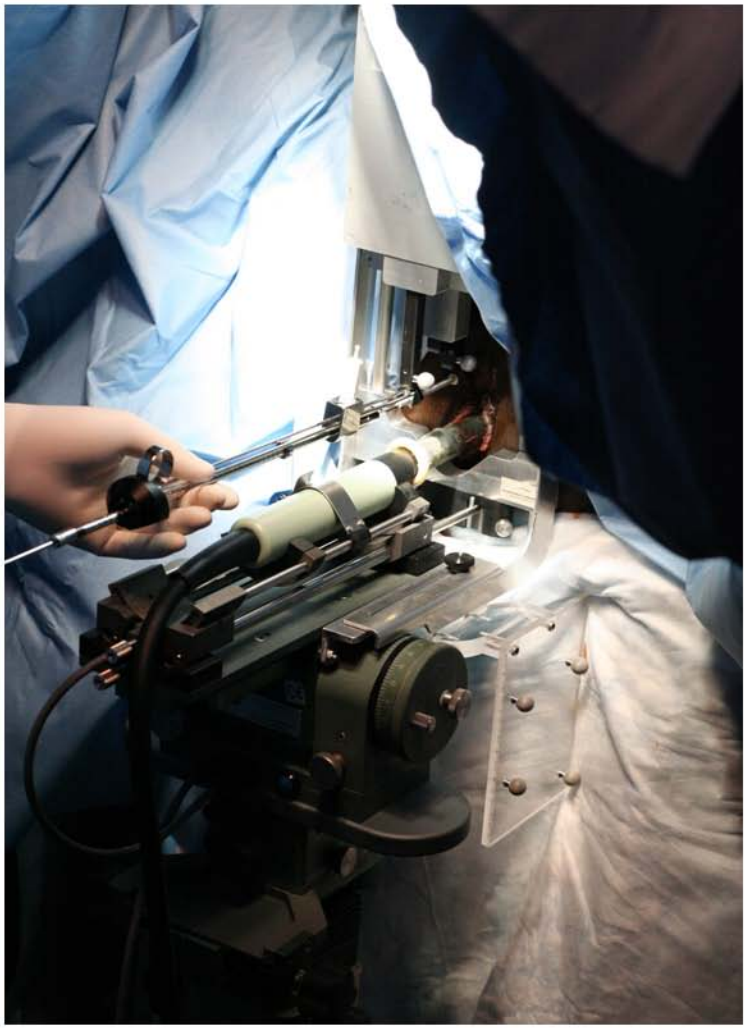

Fichtinger et al. Medical Image Analysis, 2008

MR Compatible Automated Brachytherapy Robot

Johns Hopkins University (Dan Stoianovici)

MR Compatible Automated Brachytherapy

Seed Delivery

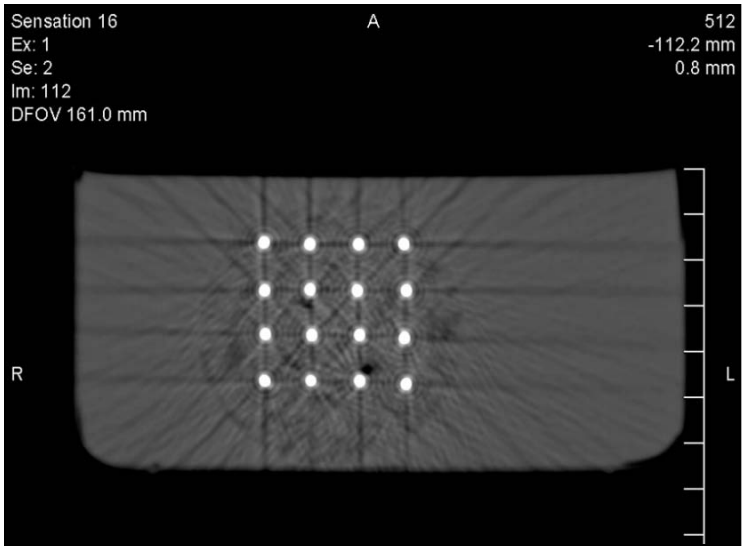

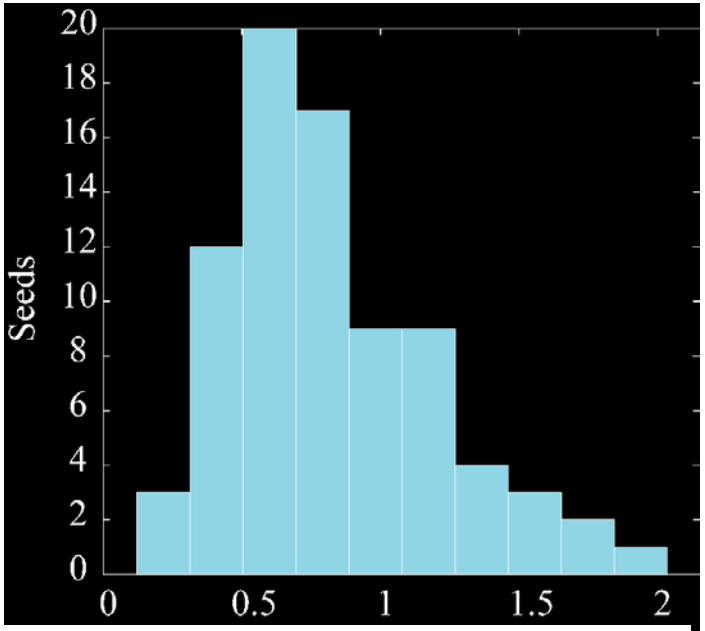

Johns Hopkins University (Dan Stoianovici)

University of British Colombia

UBC's BrachyGuide

Novel robotic guide that:

- Enables angulated insertions
- Mountable on existing brachytherapy steppers
- Offers improved safety by design:
  - Robot is OFF during needle insertion
  - Needle can be positioned manually when robot is off
  - Quick release for coarse motion

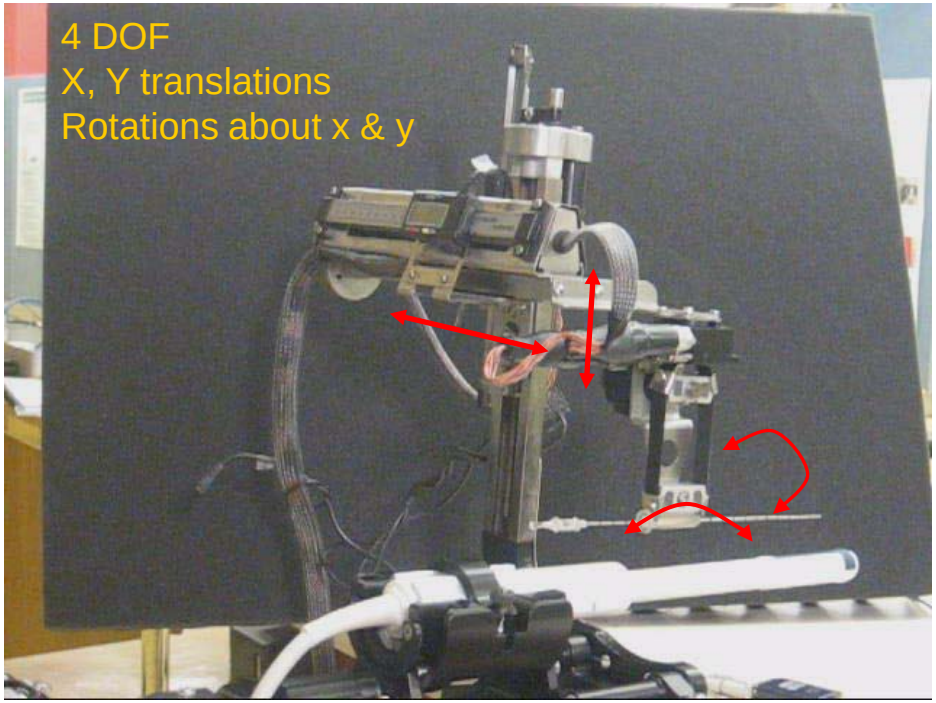

BrachGuide is accurate and its use will not extend implant time (26 needle implant with 136 seeds completed in 32 minutes)

	Maximum absolute error (mm)	Average error (mm)	Standard deviation of errors (mm)
Y-axis	3.3301	0.1080	1.1048
X-axis	2.0464	0.1993	0.8689
Distance in *XY* plane	3.4273	1.2296	0.7102

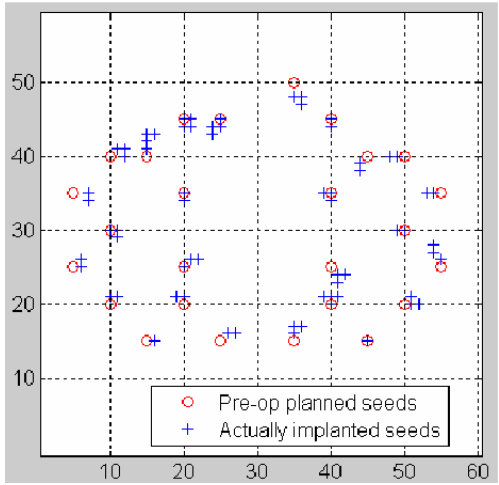

Salcudean et al., ICRA 2008

UBC's BrachyGuide - video

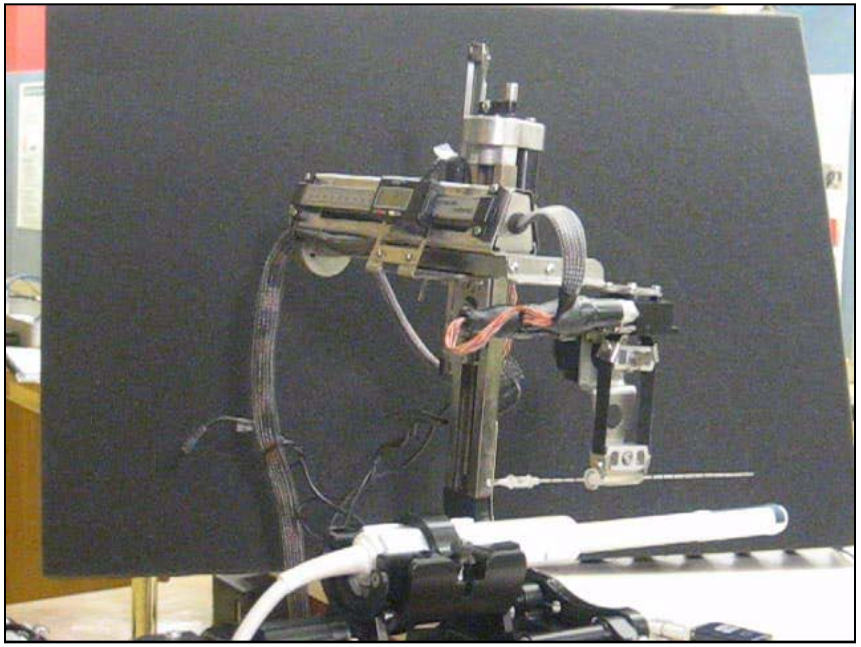

Salcudean et al., ICRA 2008

MIRAB – Multichannel Image-guided Robotic Agent for Brachytherapy

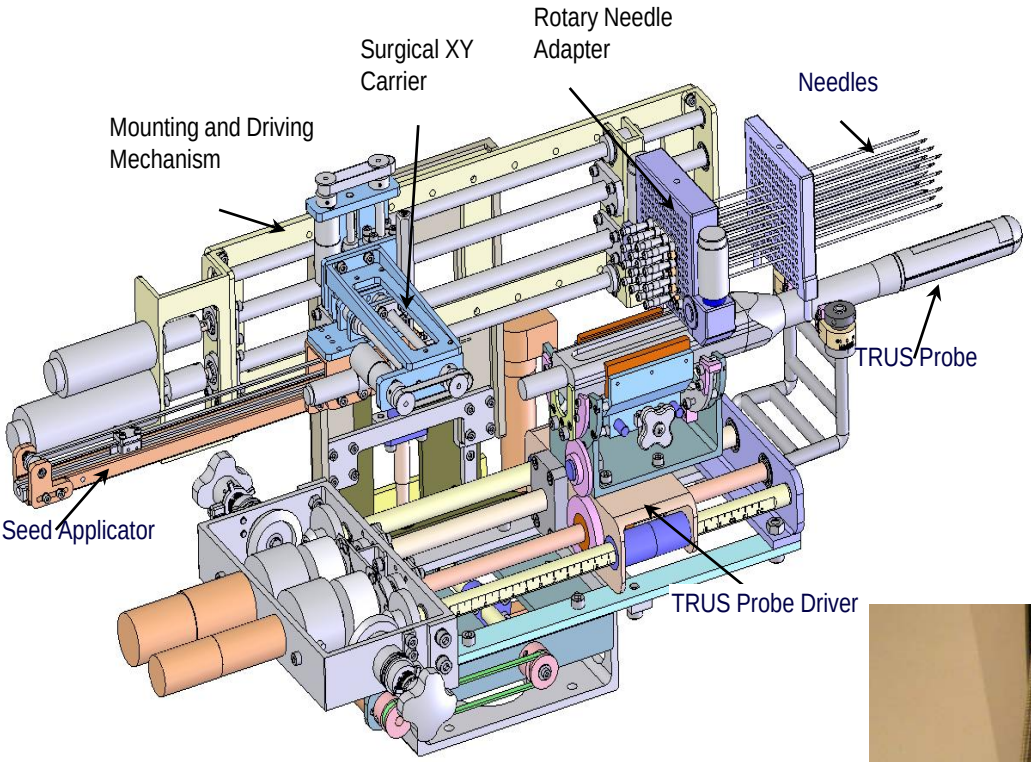

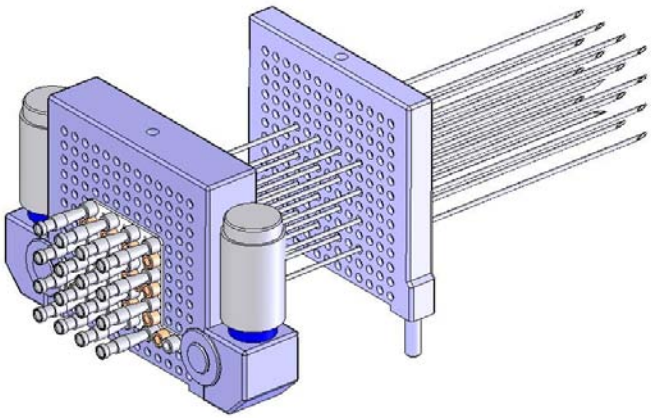

Rotary Needle Adapter

(Simultaneous rotation and insertion of 16 needles)

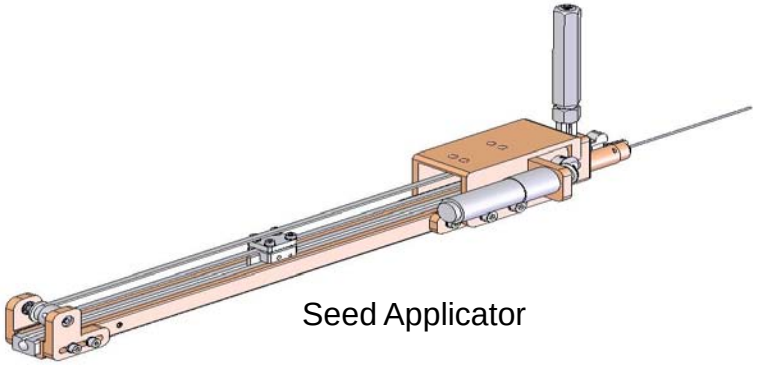

Seed Applicator

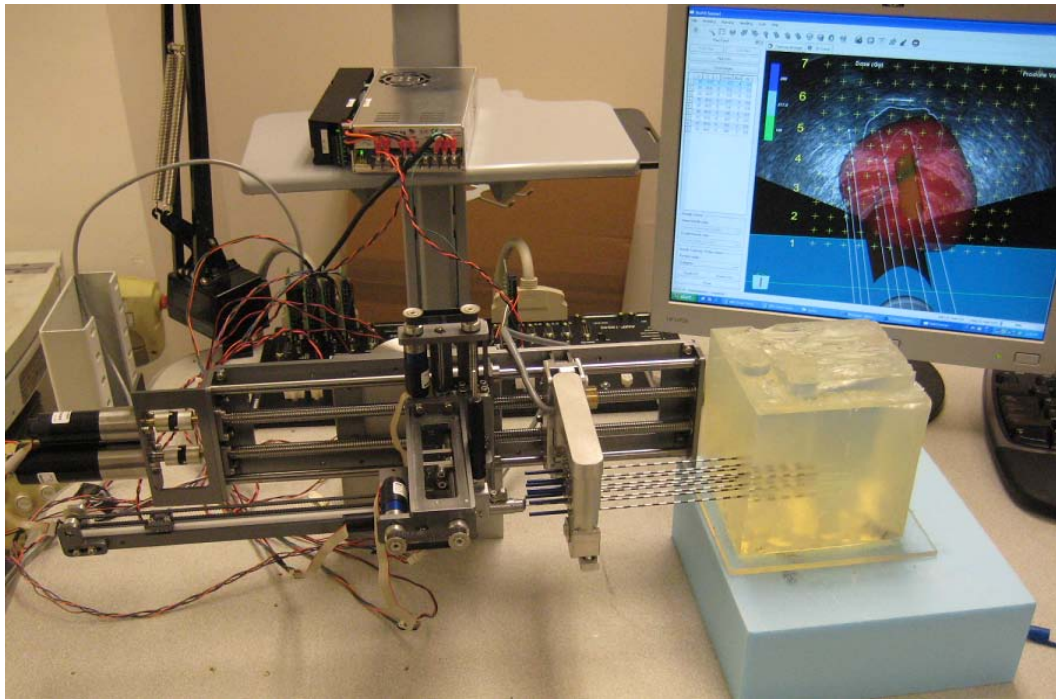

Jefferson™ Kimmel Cancer Center NCI-designated

Summary

- IGBT robotic platforms have been developed and tested
- No template – increased maneuverability
- Mainly two categories –
  1) Automated needed positioning, manual insertion and seed deliver
  2) Automated needle positioning, insertion and seed delivery
- The 3D seed placement error is at sub-millimeter level (in phantom)
- IEC-60601, EMC, FDA-IDE approval
- Clinical study – 6 cases at JHU, started at TJU